UNAMIR

HAC - CORRESPONDENCE

UNOMUR

23 DEC 1993 - 23 MAY 1994

[3 CONFIDENTIAL]

EL/WG MAY 2009

PLEASE RETAIN ORIGINAL ORDER

UN ARCHIVES
SERIES S-1062
BOX 26
FILE 2
ACC. 1998/0282

NYK PLS RELAY TKS

UNAMIR
94 MAY 24 13 - 24
HEADQUARTERS
1994 MAY 24 A 8:56

United Nations Observer Mission Uganda/Rwanda
La Mission d'observation des Nations Unies Ouganda/Rwanda

OUTGOING FAX NO.: 769
23 MAY 1994

TO: MAJ GEN DALLAIRE FORCE COMMANDER UNAMIR KIGALI MISC 677	FROM: COL ASRAR ACTING CMO UNOMUR KABALE
FAX NO: (07) 84265	FAX NO: 256 486-23816
SUBJECT: WEEKLY REPORT FROM 16 MAY TO 22 MAY 1994	

1. GENERAL SITUATION AND HIGHLIGHTS

THE GENERAL SITUATION IN UNOMUR OPERATIONAL AREA CONTINUES TO BE CALM. THERE IS NO SIGNIFICANT CHANGE.

FC
Sir, Pls send for your info
26/7
DFC/COS

2. MILITARY

A. DEPLOYMENT

(1) HQ

(A) WEEKLY CONFERENCE WITH AREA COMMANDERS AND STAFFS CHAIRED BY ACTING CMO HELD ON 171430 MAY 1994.

(B) THE ACTING CMO VISITED MERAMA HILLS, KASHEKYE, KISORO AND KATUNA DURING THE WEEK.

(C) THE DCMO VISITED BIGAGA,MERAMA HILLS,OP12,OP11 DURING THE WEEK.

(2) OP/CP

(A) KYANIKA
(B) KATUNA
(C) LUBIRIZI

PERMANENT ON WEEKLY ROTATION

FC

(D) KASHEKYE
(E) BIGAGA } PERMANENT ON DAILY ROTATION
(F) MERAMA HILLS

(3) PATROLS

DURING THE PERIOD BESIDES MANNING OP/CP FOLLOWING NUMBER OF PATROLS WERE CARRIED OUT:

(A) MOBILE PATROLS	40
(B) FOOT PATROLS	08
(C) NIGHT PATROLS	17
(D) AERIAL PATROL	06
TOTAL	71

(4) HELICOPTER MISSIONS

(A) HOURS FLOWN	31.50
(B) TOTAL PASSENGERS	145
(C) TOTAL LOAD	1800 KG
(D) TOTAL AIR MISSIONS	38

(5) DETAILS OF VEHICLES AND PERSONNEL CROSSED THE BORDER

OPS	NO OF VEHICLES CROSSED THE BORDER		NO OF PEOPLE CROSSED THE BORDER		REMARKS
	TO RWANDA	TO UGANDA	TO RWANDA	TO UGANDA	
KIANIKA	8	8	17	4	
KATUNA	103	98	263	251	
LUBIRIZI/ KASHEKYE	30	23	582	203	
MERAMA HILLS	10	7	122	130	
BIGAGA	-	-	-	-	

B. PERSONNEL

(1) STRENGTH

TOTAL - 81.

(A) AVAILABLE - 61.

(B) CASUALTIES - NIL.

(2) LEAVE/CTO - 20.

(3) MEDICAL SITUATION

ALL MILITARY AND CIVIL PERSONNEL OF THE MISSION ARE IN GOOD STATE OF HEALTH.

C. RELATIONS WITH NRA - NTR

3. VIOLATIONS, INCIDENTS AND COMPLAINTS - NTR

4. POLITICAL - NTR

5. ADMINISTRATIVE AND LOGISTICAL SUPPORT

TWO HELICOPTERS ARE NOW OPERATIONAL FROM 20 MAY '94. ONE HELICOPTER OUT OF ORDER DUE TO MAJOR TECHNICAL (GEAR BOX) PROBLEM.

6. LIAISON, CONTACTS AND MEDIA - NTR.

7. OBSERVATIONS/COMMENTS

A. APPROXIMATELY 42 (FOURTY TWO) PERSONS AGE 19 TO 25 YEARS CROSSED BORDER ON 18 MAY 94 (REFER TO PARA VII.1.B. OF OUR DAILY SITREP OF 19 MAY 94).WHICH GIVES AN INDICATION OF RECRUITMENT BY RPF FROM OLD REFUGEES SETTLED IN UGANDA.

B. ABOUT 3000 TO 4000 PERSONS FROM RWANDA ALMOST EVERY DAY COME TO UGANDA THROUGH KYANIKA IN SEARCH OF FOOD AND JOB.

8. VISIT BY HIGH LEVEL UN DIGNITARIES

MR IQBAL RIZA, ASSISTANT SECRETARY GENERAL FOR PKO,MAJ GEN BERIL, MILITARY ADVISOR FOR PKO AND MR MODEM LAWSON FROM UNOSOM II MADE A VISIT TO KABALE AN THEIR WAY TO MULINDY/ RWANDA. THE SALIENTS OF THE VISIT WERE AN VALOR

a. THE DIGNITARIES WERE RECEIVED BY A/CMO AT 220945 AT ENTEBE AIRPORT.

b. ARRIVED KABALE AT 221300 MAY BY HELICOPTER.

c. VISITED HQ UNOMUR AND WERE BRIEFED BY A/CMO ON OPERATIONAL, ADMINISTRATION AND HUMANITARIAN ASPECT.

d. ADDRESSED ALL AVAILABLE UNMOs.

e. ATTENDED DINNER WITH ALL AVAILABLE UNMOs AND CIVILIAN STAFF OF UNOMUR.

f. LEFT KABALE TO MULINDI AND CROSSED KATUNA CP AT 230930 MAY A/CMO SAW THEM AT KATUNA CP.

g. THE VISIT WENT OF ON VERY FINE AND THE DIGNITARIES LEFT WITH SATISFACTION.

h. UNAMIR MILOBS ARRIVED AT THE BORDER SLIGHTLY LATE WITH ONE VEHICLE. HOWEVER THE SECOND VEHICLE ARRIVED LATE. THE DIGNITARIES EXPRESSED THEIR DISPLEASURE TO RPF SECTOR COMMANDER, UNAMIR. THE DETAILS EXPLAINED TO COL MOEEN, COO BY A/CMO THIS MORNING.

9. BEST REGARDS.

MKF 213

NYK PLS RELAY TKS

United Nations Observer Mission Uganda/Rwanda
La Mission d'observation des Nations Unies Ouganda/Rwanda

UNAMIR 94 MAY 25 09 43

OUTGOING FAX NO. 776
25 MAY 94

PAGE 1 OF 4

TO: MAJ GEN R. A. DALLAIRE FC UNAMIR KIGALI MISC 682	FROM: COL ASKAR ACTING CMO UNOMUR KABALE
FAX NO: (07) 84265	FAX NO: 256 486-23816

SUBJECT: DAILY SITREP COVERING PERIOD 241000 LT MAY TO 251000 LT MAY 94

I. GENERAL SITUATION

THE UNOMUR OPERATIONAL AREA IS CALM.

II. FACTIONAL ACTIVITIES

A. POLITICAL - NTR

B. MILITARY

(1) NRA - NTR

(2) RPF - NTR

(3) OTHERS - NTR.

III. OWN MILITARY ACTIVITIES

A. HQS - DCMO VISITED KABALE RIVER.

B. AREAS

(1) EAST/KABALE

(A) STATIC POST

(1) KATUNA- TEAM JULIET UP TO 301000 MAY 94.

(1) FC
Pse see the Annexes attached.
26/5
DFC/LOS

Seen
26/5
DIC

FC

(2) LUBIRIZI- TEAM DELTA UP TO 301100 MAY 94.

(3) KASHEKYE- TEAM DELTA UP TO 301100 MAY 94.

(4) BIGAGA- TEAM ECHO ON A 24 HOURS BASIS.

(5) MERAMA HILLS- TEAM FOXTROT ON A 24 HOURS BASIS.

(B) PATROLLING

(1) TEAM GOLF MANNED OP-16 AND OP-17.

(2) TEAM HOTEL MANNED OP-9.

(3) TEAM INDIA CARRIED OUT PATROLLING AT KAFUNZO AREA.

(4) TEAM HOTEL MANNED OP ON KABALE RIVER.

(5) TEAMS HOTEL AND JULIET CARRIED OUT NIGHT PATROLLING AT KABALE RIVER.

(6) AERIAL PATROLLING FROM OP-1 TO OP-17 WERE DONE BY HQ STAFF AND TEAM FOXTROT.

(C) OPERATIONAL ASPECTS - NTR

2) WEST/KISORO

(A) STATIC POST

(1) KYANIKA- TEAM ALPHA UP TO 301000 MAY 94.

(B) PATROLLING

(1) TEAM CHARLIE CARRIED OUT PATROLLING IN BUSANZA AND NGURUNGURU AREAS.

(2) TEAM CHARLIE CARRIED OUT TWO PATROLLING IN NGURUNGURU AN BUSANZA AREAS.

(3) TEAM BRAVO CARRIED OUT TWO PATROLLING IN LUGENDABARE AND CHAHAFFY AREAS.

(4) TEAM BRAVO CARRIED OUT PATROLLING IN CHAHAFFY AND LUGENDABARE AREAS.

(5) TEAM CHARLIE CARRIED OUT NIGHT PATROLLING IN BUSANZA AND NGURUNGURU AREAS.

(6) TEAM BRAVO CARRIED OUT NIGHT PATROLLING IN CHAHAFFY AND AND LUGENDABARE AREAS.

(7) TEAM ALPHA CARRIED OUT FOOT PATROLLING IN CHAHAFFY AND AND NGURUNGURU AREAS.

(8) AERIAL PATROLLING FROM KISORO - OP-23 - OP-22 - OP-21 - - OP20 - TO KISORO.

(C) OPERATIONAL ASPECTS - NTR.

IV. HUMANITARIAN ACTIVITIES - SEE ANNEX "A"

V. CIVIL AFFAIRS - NTR

VI. LOGISTICS - NTR

VII. MISCELLANEOUS

A. BORDER CROSSINGS

(1) FROM UGANDA TO RWANDA:

15 VEHICLES (TRUCKS 04, JEEPS/PICK UPS 10, CARS 01) CROSSED THE BORDER THROUGH KATUNA, KYANIKA, KASHEKYE AND MERAMA HILLS WITH NINETY (90) PASSENGERS. INCLUDING FORTY THREE (43) REFUGEES.

(2) FROM RWANDA TO UGANDA:

(A) 13 VEHICLES (TRUCKS 04, JEEPS/PICK UPS 07, CARS 02) CROSSED THE BORDER THROUGH KATUNA, KYANIKA, KASHEKYE AND MERAMA HILLS WITH THIRTY SEVEN (37) PASSENGERS.

(B) APPROXIMATELY 2700 (TWO THOUSAND AND SEVEN HUNDRED) RWANDEES CROSSED KYANIKA BORDER FOR WORK AND MARKETING IN MORNING HOURS AND WENT BACK IN AFTERNOON SAME DAY.

B. HELICOPTER SITUATION: ONE HELICOPTER IS PRESENTLY OPERATIONAL. ONE HELICOPTER IS OUT OF ORDER DUE TO MAJOR TECHNICAL(GEAR BOX) PROBLEM AND ONE FOR COMPONENT REPLACEMENT.

VIII. BEST REGARDS.

4/4 226

ANNEX "A"

HUMANITARIAN ASSISTANCE AGENCIES (HAA)
CROSSING REPORT

OP KATUNA, KYANIKA

DATE

ORGANIZATION	NO OF VEHICLES	NO OF PERSONS	PURPOSE	DESTINATION	EXPECTED DATE OF RETURN	REMARKS
ICRC	6	16	food distrib	BYUMBA	24 MAY	GEBARDS JELI
WORLD VISION	4	3	visit refu camp	GITAMA		SANDRA
GERMANY ED	1	2	visit refu camp	RUTARE		Dr. RAYMONJEL
SISTERS OF GOOD	4	5	relief distrib	BYUMBA		NWITANERA
IMC	4	2	assesment	BYUMBA		LORA DOWN
SAMARITAN PURSE	4	10	assesment	RUROVO		JAMES
MGE	4	2	mech. service	BYUMBA		KRASER
CATHOLIC RELIEF	4	1	assessment	KIDUNGO		WILLIAM
ICRC	4	2	relief work	RUSLAKI		SELIED
GOAL	1	3	relief work	MUHUDI		KAMR
AMREEF	1	3	relief work	KIUSYU		DEAN A. SWAY
CARE	1	2	visit their office	RUTARE		VERNON
UNICEF	1	3	visit their office	MUHUDI		WILLYMPOYI
QOS	1	2	visit	BYUMBA		JOHERSAVER
ICRC	4	1	camp visit	BYUMBA		DICLISR
WORLD VISION	5	6	relief distrib	BYUMBA		MACK JAME
MEDIC	4	2	assesment	KIGALI		BEIJE JOHN
BRITISH S COMM	1	3	visit UN office	BYUMBA		Dr. ROMESH
TERRE DE HOMMES	1	2	health service	GATUNA	24 MAY	
ICRC	1	1	assesment	BYUMBA	24 MAY	
ICRC	4	3	medical	KIBAHO	24 MAY	MARIA TERESA GARRIDO

* REMARKS TO INCLUDE THE NAME OF THE SENIOR MEMBER AND LOADING !!!

UNAMIR

United Nations Observer Mission Uganda/Rwanda
La Mission d'observation des Nations Unies Ouganda/Rwanda

OUTGOING FAX NO. 774
24 MAY 94 MISC 679 PAGE 1 OF 5

TO: MAJ GEN R. A. DALLAIRE FC UNAMIR KIGALI	FROM: for COL ASRAR ACTING CMO UNOMUR KABALE
FAX NO: (07) 84265	FAX NO: 256 486-23816
SUBJECT: DAILY SITREP COVERING PERIOD 231000 LT MAY TO 241000 LT MAY 94	

I. GENERAL SITUATION

THE UNOMUR OPERATIONAL AREA IS CALM.

II. FACTIONAL ACTIVITIES

A. POLITICAL - NTR

B. MILITARY

(1) NRA - NTR

(2) RPF - NTR

(3) OTHERS - NTR.

III. OWN MILITARY ACTIVITIES

A. HQS -

VISIT OF SPECIAL UN ENVOY

(1) MR IQBAL RIZA, SPECIAL UN ENVOY AND MAJ GEN BAREL RETURNED TO KABALE FROM MULINDI AFTER FAILING TO MOVE TO KIGALI DUE TO SECURITY REASONS.

724
2/5

(2) THEY HAD AN INFORMAL MEETING WITH REPRESENTATIVES OF HUMANITARIAN ASSISTANCE AGENCIES (HAA) AT HQ UNOMUR. THE DIGNITARIES GET A FEEL/ FEEDBACK OF HAA ACTIVITIES.

(3) THE DIGNITARIES ARE DUE TO LEAVE KABALE BY HELICOPTER FOR ENTEBBE ON WAY TO KIGALI ANYTIME AFTER 0900 HRS TODAY.

(4) A/CMO WILL ACCOMPANY AND SEE THEM OFF AT ENTEBBE.

(5) DCMO VISITED BIGAGA AND OP12. ALSO CARRIED OUT RECCE (AIR AND GROUND) AT KABALE RIVER.

B. AREAS

(1) EAST/KABALE

(A) STATIC POST

(1) KATUNA- TEAM JULIET UP TO 301000 MAY 94.

(2) LUBIRIZI- TEAM DELTA UP TO 301100 MAY 94.

(3) KASHEKYE- TEAM DELTA UP TO 301100 MAY 94.

(4) BIGAGA- TEAM ECHO ON A 24 HOURS BASIS.

(5) MERAMA HILLS- TEAM FOXTROT ON A 24 HOURS BASIS.

(B) PATROLLING

(1) TEAM GOLF MANNED OP-12.

(2) TEAM FOXTROT MANNED OP-1 AND OP-12.

(3) TEAM ECHO CARRIED OUT PATROLLING AT KAFUNZO AREA.

(4) TEAM FOXTROT CARRIED OUT PATROLLING AT KAFUNZO AREA.

(5) TEAM HOTEL CARRIED OUT NIGHT PATROLLING AT KAFUNZO AREA.

(6) TEAM HOTEL CARRIED OUT NIGHT PATROLLING AT RUBAYA AREA.

(7) TEAM INDIA CARRIED OUT NIGHT PATROLLING AT RUBAYA AREA.

(C) OPERATIONAL ASPECTS - NTR

2) WEST/KISORO

(A) STATIC POST

(1) KYANIKA- TEAM ALPHA UP TO 301000 MAY 94.

(B) PATROLLING

(1) TEAM CHARLIE CARRIED OUT PATROLLING IN CHAHAFFY AND LUGENDABARE AREAS.

774
3/5

(2) TEAM BRAVO CARRIED OUT PATROLLING IN BUSANZA AND NGURUNGURU AREAS.

(3) TEAM CHARLIE CARRIED OUT NIGHT PATROLLING IN LUGENDABARE AND CHAHAFFY AREAS.

(4) TEAM BRAVO CARRIED OUT NIGHT PATROLLING IN BUSANZA AND NGURUNGURU AREAS.

(C) OPERATIONAL ASPECTS - NTR.

IV. HUMANITARIAN ACTIVITIES. -

(A) SEE ANNEX "A"

(B) VISIT OF SPECIAL UN ENVOY

(1) MR IQBAL RIZA, SPECIAL UN ENVOY AND MAJ GEN BARIL RETURNED TO KABALE FROM MULINDI AFTER FAILING TO MOVE TO KIGALI DUE TO SECURITY REASONS.

(2) THEY HAD AN INFORMAL MEETING WITH REPRESENTATIVES OF HUMANITARIAN ASSISTANCE AGENCIES (HAA) AT HQ UNOMUR. THE DIGNITARIES GET A FEEL/ FEEDBACK OF HAA ACTIVITIES.

(3) THE DIGNITARIES ARE DUE TO LEAVE KABALE BY HELICOPTER TO ENTEBBE ON WAY TO KIGALI ANYTIME AFTER 0900 HRS TODAY.

(4) A/CMO WILL ACCOMPANY AND SEE THEM OFF AT ENTEBBE.

V. CIVIL AFFAIRS - NTR

VI. LOGISTICS - NTR

VII. MISCELLANEOUS

A. BORDER CROSSINGS

(1) FROM UGANDA TO RWANDA:

30 VEHICLES (TRUCKS 02, JEEPS/PICK UPS 25, CARS 03) CROSSED THE BORDER THROUGH KATUNA, KYANIKA, KASHEKYE AND MERAMA HILLS WITH ONE HUNDRED AND SIXTY EIGHT (168) PASSENGERS. INCLUDING ONE HUNDRED AND EIGHTEEN (118) REFUGEES.

(2) FROM RWANDA TO UGANDA:

(A) 18 VEHICLES (TRUCKS 03, JEEPS/PICK UPS 10, CARS 05) CROSSED

724
4/5

THE BORDER THROUGH KATUNA, KYANIKA, KASHEKYE AND MERAMA HILLS WITH SIXTY NINE (69) PASSENGERS.

(B) APPROXIMATELY 4500 (FOUR THOUSAND AND FIVE HUNDRED) RWANDEES CROSSED KYANIKA BORDER FOR WORK AND MARKETING IN MORNING HOURS AND WENT BACK IN AFTERNOON SAME DAY.

B. HELICOPTER SITUATION: TWO HELICOPTERS ARE PRESENTLY OPERATIONAL.

VIII. BEST REGARDS.

ANNEX 'A'

HUMANITARIAN ASSISTANCE AGENCIES (HAA)
CROSSING REPORT

OP KATUNA , KYANIKA

DATE 24. MAY '94

ORGANIZATION	NO OF VEHICLES	NO OF PERSONS	PURPOSE	DESTINATION	EXPECTED DATE OF RETURN	REMARKS
SAMARITAN PURSE	2	10	medical	RUTARE	23 MAY	JOHN
UNHCR	1	1	medical	MULINDI	23 MAY	DELANIJ
INTERNATIONAL M	1	3	medical	MULINDI	23 MAY	LORA
SOS CHILDREN	1	1	camp visit	BYUMBA	23 MAY	JOHN
ICRC	6	12	food	BYUMBA	23 MAY	
ACORD	2	6	relief	BYUMBA	23 MAY	MOJIJI
CATHOLIC RELIEF	1	2	relief	BYUMBA	23 MAY	WILIAM
ICRC	3	7	medical+food	RUTARE	23 MAY	ELIN
TERRE DES HOMMES	1	4	relief	BYUMBA	23 MAY	ROJO CARES
WORLD VISION	1	3	relief	BYUMBA	23 MAY	KAREN HOMMES
ATLAS	1	4	food	GAHINI	23 MAY	BOUNIERE
UCF	1	3	meeting	BYUMBA	26 MAY	STEVEN
CARE	1	3	meeting	GATUNA	23 MAY	EERNON
UNREF	1	2	medical	GATUNA	24 MAY	NZABINITA
WORLD RELIEF	1	3	relief	MULINDI	23 MAY	LOUDEN
GERMANY DOCT.	1	2	medical	RUTARE	24 MAY	RAYMOND
MSF	1	3	medical	KIDAHO	25 MAY	DANIKA ; THORUBERRY

REMARKS TO INCLUDE THE NAME OF THE SENIOR MEMBER AND LOADING !!!

MKF177

UNAMIR

'94 MAY 23

NYK FLS RELAY 723

United Nations Observer Mission Uganda/Rwanda
La Mission d'observation des Nations Unies Ouganda/Rwanda

1994 MAY 23 P 7:22

OUTGOING FAX NO. 767
23 MAY 94

TO: MAJ GEN R. A. DALLAIRE FC UNAMIR KIGALI Misc 675	FROM: COL ASRAR ACTING CMO UNOMUR KABALE
FAX NO: (07) 84265	FAX NO: 256 486-23816
SUBJECT: DAILY SITREP COVERING PERIOD 221000 LT MAY TO 231000 LT MAY 94	

I.GENERAL SITUATION

THE UNOMUR OPERATIONAL AREA IS CALM.

II.FACTIONAL ACTIVITIES

A.POLITICAL - NTR

B.MILITARY

(1) NRA - NTR

(2) RPF - NTR

(3) OTHERS - NTR.

III.OWN MILITARY ACTIVITIES

A. HQS -

(1) MR IQBAL RIZA, ASSISTANT SECRETARY GENERAL FOR PKO, MAJ GEN BERIL, MILITARY ADVISOR FOR PKO AND MR MODEM LAWSON FROM UNOSOM II VISITED UNOMUR. THEY WERE RECEIVED BY A/CMO AT ENTEBBE AIRPORT AND BROUGHT TO KABALE BY HELICOPTER.

FC OPS

A BRIEFING WAS GIVEN AT HQ UNOMUR COVERING OPERATION, ADMINISTRATION AND HUMANITARIAN ASPECT. THE DIGNITARYES ADDRESSED UNMOs AND ATTENDED DINNER HOSTED IN THEIR HONOUR. THEY LEFT KABALE FOR MULINDI IN THE MORNING AND CROSSED KATUNA AT 230930 MAY. A/CMO SAW THEM OFF AT KATUNA BORDER.

(2) THE VISIT WENT OFF VERY FINE AND THE DIGNITARIES LEFT WITH SATISFACTION.

(3) UNAMIR MILOBS ARRIVED AT THE BORDER SLIGHTLY LATE WITH ONE VEHICLE. HOWEVER THE SECOND VEHICLE ARRIVED LATER. THE DIGNITARIES EXPRESSED THEIR DISPLEASURE TO RPF SECTOR COMMANDER, UNAMIR. THE DETAILS EXPLAINED TO COL MOEEN, COO BY A/CMO THIS MORNING

B. AREAS

(1) EAST/KABALE

(A) STATIC POST

(1) KATUNA- TEAM INDIA UP TO 231000 MAY 94.

(2) LUBIRIZI- TEAM HOTEL UP TO 231100 MAY 94.

(3) KASHEKYE- TEAM HOTEL UP TO 231100 MAY 94.

(4) BIGAGA- TEAM JULIET ON A 24 HOURS BASIS.

(5) MERAMA HILLS- TEAM DELTA ON A 24 HOURS BASIS.

(B) PATROLLING

(1) TEAM FOXTROT MANNED OP-7.

(2) TEAM ECHO MANNED OP-16.

(3) TEAM GOLF CARRIED OUT PATROLLING AT KAFUNZO AREA.

(4) TEAM INDIA CARRIED OUT PATROLLING AT RUBAYA AREA.

(C) OPERATIONAL ASPECTS - NTR

2) WEST/KISORO

(A) STATIC POST

(1) KYANIKA- TEAM BRAVO UP TO 231000 MAY 94.

(B) PATROLLING

(1) TEAM ALPHA CARRIED OUT PATROLLING IN BUSANZA, KABINDI, NGURUNGURU, CHAHAFFY, LUGENDABARE AREAS.

(2) TEAM CHARLIE CARRIED OUT PATROLLING IN BUSANZA, KABINDI, NGURUNGURU CHAHAFFY, LUGENDABARE AREAS.

(3) TEAM BRAVO CARRIED OUT FOOT PATROL FROM KYANIKA TO CHAHAFFY (BP #7).

(4) ABRIAL PATROLLING FROM KISORO - OP-20 - OP-19 - - OP-18 - OP-17 - KISORO.

(C) OPERATIONAL ASPECTS - NTR.

IV. HUMANITARIAN ACTIVITIES - SEE ANNEX "A".

V. CIVIL AFFAIRS - NTR

VI. LOGISTICS - NTR

VII. MISCELLANEOUS

A. BORDER CROSSINGS

(1) FROM UGANDA TO RWANDA:

23 VEHICLES (TRUCKS 06, JEEPS/PICK UPS 11, CARS 06) CROSSED THE BORDER THROUGH KATUNA, KYANIKA, KASHEKYE AND MERAMA HILLS WITH THREE HUNDRED (300) PASSENGERS. INCLUDING TWO HUNDRED AND NINE (209) REFUGEES.

(2) FROM RWANDA TO UGANDA:

(A) 17 VEHICLES (TRUCKS 05, JEEPS/PICK UPS 02, CARS 10) CROSSED THE BORDER THROUGH KATUNA, KYANIKA, KASHEKYE AND MERAMA HILLS WITH THIRTY EIGHT (38) PASSENGERS.

(B) APPROXIMATELY 2000 (TWO THOUSAND) RWANDEES 55% CHILDREN AND WOMEN CROSSED KYANIKA BORDER FOR WORK AND MARKETING IN MORNING HOURS AND WENT BACK IN AFTERNOON SAME DAY.

B. HELICOPTER SITUATION: TWO HELICOPTERS ARE PRESENTLY OPERATIONAL.

VIII. BEST REGARDS.

MAY-23-1994 07:54 2129633100 P.04 TOTAL P.04

767 4/4

ANNEX "A"

HUMANITARIAN ASSISTANCE AGENCIES(HAA)
CROSSING REPORT

OP KATUNA

DATE 23 MAY 94

ORGANIZATION	NO OF VEHICLES	NO OF PERSONS	PURPOSE	DESTINA-TION	EXPECTED DATE OF RETURN	REMARKS
POLITIKEN	1	4	News report	MULINDI	26 MAY	STJERNVEN
ARD	1	5	News report	MULINDI	23 MAY	HANS HUIS
WORLD VISION	1	3	conference	MULINDI	25 MAY	KAREN HOME
RELIGION	1	4	pers convoy	BYUMBA	22 MAY	ALLEUE ALAN

* REMARKS TO INCLUDE THE NAME OF THE SENIOR MEMBER AND LOADING !!!

NYK PLS RELAY THS

1994 MAY 22 A 6:53

United Nations Observer Mission Uganda/Rwanda
La Mission d'observation des Nations Unies Ouganda/Rwanda

MKF 169

OUTGOING FAX NO. 764
22 MAY 94

PAGE 1 OF

TO: MAJ GEN R. A. DALLAIRE FC UNAMIR KIGALI MISC 672	FROM: for COL ASRAR ACTING CMO UNOMUR KABALE 22/05/94 Lt Col Rwakasy
FAX NO: (07) 84265	FAX NO: 256 486-23816
SUBJECT: DAILY SITREP COVERING PERIOD 211000 LT MAY TO 221000 LT MAY 94	

I. GENERAL SITUATION

THE UNOMUR OPERATIONAL AREA IS CALM.

II. FACTIONAL ACTIVITIES

A. POLITICAL - NTR

B. MILITARY

(1) NRA - NTR

(2) RPF - NTR

(3) OTHERS - NTR.

III. OWN MILITARY ACTIVITIES

A. HQS (1) CMO WENT TO KAMPALA TO RECEIVE GEN BARIL's DELLEGATION.

(2) DCMO CARRIED OUT RECCE IN AOR.

B. AREAS

(1) EAST/KABALE

(A) STATIC POST

(1) KATUNA - TEAM INDIA UP TO 231000 MAY 94.

FC

(2) LUBIRIZI- TEAM HOTEL UP TO 231100 MAY 94.

(3) KASHEKYE- TEAM HOTEL UP TO 231100 MAY 94.

(4) BIGAGA- TEAM JULIET ON A 24 HOURS BASIS.

(5) MERAMA HILLS- TEAM DELTA ON A 24 HOURS BASIS.

(B) PATROLLING

(1) TEAM FOXTROT MANNED OP-5.

(2) TEAM ECHO MANNED OP-12.

(3) TEAM GOLF CARRIED OUT PATROLLING AT KAFUNZO AREA.

(C) OPERATIONAL ASPECTS - NTR

2) WEST/KISORO

(A) STATIC POST

(1) KYANIKA- TEAM BRAVO UP TO 231000 MAY 94.

(B) PATROLLING

(1) TEAM ALPHA CARRIED OUT PATROLLING IN BUSANZA, KABINDI, NGURUNGURU, CHAHAFFY, LUGENDABARE AREAS.

(2) TEAM CHARLIE CARRIED OUT PATROLLING IN BUSANZA, KABINDI, NGURUNGURU CHAHAFFY, LUGENDABARE AREAS.

(3) TEAM ALPHA CARRIED OUT NIGHT PATROLLING IN BUSANZA, KABINDI, NGURUNGURU, CHAHAFFY, LUGENDABARE AREAS .

(4) TEAM CHARLEY CARRIED NIGHT OUT PATROLLING IN BUSANZA, KABINDI, NGURUNGURU, CHAHAFFY, LUGENDABARE AREAS .

(5) TEAM BRAVO CARRIED OUT FOOT PATROL FROM KYANIKA TO CHAHAFFY (BP #7).

(8) AERIAL PATROLLING FROM KISORO - KYANIKA - OP-24 - - KABINDI ROAD - KISOSI - KISORO.

(C) OPERATIONAL ASPECTS - NTR.

IV. HUMANITARIAN ACTIVITIES

A. SEE ANNEX "A".

B. A COORDINATION MEETING WAS HOLD AT UNOMUR/HQ AMONG DIFFERENT NGOs AND AGENCIES THAT ARE OPERATING IN RWANDA.

V. CIVIL AFFAIRS - NTR

VI. LOGISTICS - NTR

VII. MISCELLANEOUS

A. BORDER CROSSINGS

(1) FROM UGANDA TO RWANDA:

20 VEHICLES (TRUCKS 04, JEEPS/PICK UPS 08, CARS 08) CROSSED THE BORDER THROUGH KATUNA, KYANIKA, KASHEKYE AND MERAMA HILLS WITH ONE HUNDRED AND FIFTY NINE (159) PASSENGERS. INCLUDING ONE HUNDRED AND THREE (103) REFUGEES.

(2) FROM RWANDA TO UGANDA:

(A) 16 VEHICLES (TRUCKS 01, JEEPS/PICK UPS 10, CARS 05) CROSSED THE BORDER THROUGH KATUNA, KYANIKA, KASHEKYE AND MERAMA HILLS WITH FIFTY SEVEN (57 PASSENGERS. INCLUDING NINE (9) REFUGEES.

(B) APPROXIMATELY 2500 (TWO THOUSAND FIVE HUNDRED) RWANDEES 65% CHILDREN AND WOMEN CROSSED KYANIKA BORDER FOR WORK AND MARKETING IN MORNING HOURS AND WENT BACK IN ATERNOON SAME DAY.

B. HELICOPTER SITUATION: TWO HELICOPTERS ARE PRESENTLY OPERATIONAL.

VIII. BEST REGARDS.

ANNEX "A"

HUMANITARIAN ASSISTANCE AGENCIES (HAA)
CROSSING REPORT

OP - KATUNA, KYANIKA

DATE 21 MAY '94

ORGANIZATION	NO OF VEHICLES	NO OF PERSONS	PURPOSE	DESTINATION	EXPECTED DATE OF RETURN	REMARKS
SISTER OF GOOD	1	5	collect pers	MULINDI	29 MAY	
SAVE CHILDREN F	1	3	medical	BYUMBA	21 MAY	
RELIEFOU	1	4	evacuation	BYUMBA	21 MAY	
COMPASSION INT	1	4	relief coop	BYUMBA	21 MAY	
GERMAN AMBUL. DOCT	1	2	health delivery	RUTARE	21 MAY	
ACO	1	2	relief	BYUMBA	21 MAY	
SOS INTERNATIONAL	1	1	collect pers	BYUMBA	21 MAY	
UNHCR	1	2	meeting RPF	MULINDI	21 MAY	
MSF HOLAND	1	4	relief coord	MULINDI	21 MAY	
ICRC	7	29	food	KIDAHO	21 MAY	KYANIKA CP

REMARKS TO INCLUDE THE NAME OF THE SENIOR MEMBER AND LOADING !!!

NYK PLS RELAY TICS FSM465-05

[redacted]

[redacted]

1994 MAY 19 A 5:55

United Nations Observer Mission Uganda/Rwanda
La Mission d'observation des Nations Unies Ouganda/Rwanda

MRF 129

OUTGOING FAX NO. 756
19 MAY 94 PAGE 1 OF 3

TO: MAJ GEN R. A. DALLAIRE FC UNAMIR KIGALI MISC 662	FROM: COL ASRAR ACTING CMO UNOMUR KABALE
FAX NO: (07) 84265	FAX NO: 256 486-23816
SUBJECT: DAILY SITREP COVERING PERIOD 181000 LT MAY TO 191000 LT MAY 94	

I. GENERAL SITUATION

THE UNOMUR OPERATIONAL AREA IS CALM.

II. FACTIONAL ACTIVITIES

A. POLITICAL - NTR

B. MILITARY

1) NRA - NTR

2) RPF - NTR

3) OTHERS - NTR.

III. OWN MILITARY ACTIVITIES

A. HQS

B. AREAS

(1) EAST/KABALE

(A) STATIC POST

(1) KATUNA- TEAM INDIA UP TO 231000 MAY 94.

(2) LUBIRIZI- TEAM HOTEL UP TO 231100 MAY 94.

(3) KASHEKYE- TEAM HOTEL UP TO 231100 MAY 94.

FC c/D

756 2/3

(4) BIGAGA- TEAM JULIET ON A 24 HOURS BASIS.

(5) MERAMA HILLS- TEAM DELTA ON A 24 HOURS BASIS.

(B) PATROLLING

(1) TEAM ECHO MANNED OP-12 AND OP-13.

(2) TEAM FOXTROT MANNED OP-6 AND OP-7.

(3) TEAM INDIA CARRIED OUT NIGHT PATROLLING AT F ZONE.

(4) TEAM GOLF CARRIED OUT PATROLLING AT B-3 SUBZONE.

(C) OPERATIONAL ASPECTS - NTR

2) WEST/KISORO

(A) STATIC POST

(1) KYANIKA- TEAM BRAVO UP TO 231000 MAY 94.

(B) PATROLLING

(1) TEAM ALPHA CARRIED OUT TWO PATROLLING IN NGURUNGURU AND LUGENDABARE AREAS.

(2) TEAM ALPHA CARRIED OUT PATROLLING IN LUGENDABARE AND CHAHAFFY AREAS.

(3) TEAM ALPHA CARRIED OUT NIGHT PATROLLING IN LUGENDABARE AND CHAHAFFY AREAS.

(4) TEAM CHARLEY CARRIED OUT TWO PATROLLING IN BUSANZA AND CHAHAFFY AREAS.

(5) TEAM CHARLEY CARRIED OUT PATROLLING IN BUSANZA AND NGURUNGURU AREAS.

(6) TEAM CHARLEY CARRIED OUT NIGHT PATROLLING IN BUSANZA AND NGURUNGURU AREAS.

(7) TEAM BRAVO CARRIED OUT FOOT PATROL FROM NGURUNGURU TO CHAHAFFY (BP #7).

(8) AERIAL PATROLLING FROM KISORO - OP-20 - OP19 - OP-15 - - OP-17 - TO KISORO.

(C) OPERATIONAL ASPECTS - NTR.

IV. HUMANITARIAN ACTIVITIES

756 3/3

A. ICRC - ONE (01) VEHICLE CROSSED THE BORDER THROUGH KATUNA ON 18 MAY '94 TO RWANDA AND ELEVEN (11) VEHICLES BACK ON THE SAME DAY.

B. CARE - ONE (01) VEHICLE CROSSED THE BORDER THROUGH KATUNA ON 18 MAY '94 TO RWANDA AND TWO (02) VEHICLES CAME BACK ON THE SAME DAY.

C. WFP - NTR

V. CIVIL AFFAIRS - NTR

VI. LOGISTICS - NTR

VII. MISCELLANEOUS

A. BORDER CROSSINGS:

(1) FROM UGANDA TO RWANDA:

(A) 26 VEHICLES (TRUCKS 05, JEEPS/PICK UPS 18, CARS 03) CROSSED THE BORDER THROUGH KATUNA, KYANIKA, KASHEKYE AND MERAMA HILLS WITH ONE HUNDRED AND NINETY ONE (191) PASSENGERS. INCLUDING ONE HUNDRED AND THREE (103) REFUGEES.

(B) APPROXIMATELY 42 (FOURTY TWO) YOUNG PERSONS, AGE 19 TO 25 YEARS CROSSED MERAMA HILL OP. THEY CLAIMED THEMSELVES TO BE REFUGEES BUT FROM LOOK SEEMS TO BE RECRUITS FOR RPF.

(2) FROM RWANDA TO UGANDA:

(A) 30 VEHICLES (TRUCKS 08, JEEPS/PICK UPS 15, CARS 07) CROSSED THE BORDER THROUGH KATUNA, KYANIKA AND KASHEKYE WITH FIFTY ONE (51) PASSENGERS.

(B) APPROXIMATELY 4200(FOUR THOUSAND AND TWO HUNDRED) RWANDIES CROSSED KYANIKA BORDER FOR WORK AND MARKETING IN MORNING HOURS AND WENT BACK IN AFTERNOON SAME DAY.

B. HELICOPTER SITUATION: TWO HELICOPTERS ARE PRESENTLY OPERATIONAL.ONE HELICOPTER OUT OF ORDER DUE TO MAJOR TECHNICAL(GEAR BOX) PROBLEM.

VIII. BEST REGARDS.

NL BURUM LES 493131318=FOMU X 18-MAY-1994 13:14:50 257099

MKF 118

ZC3C OUT.029

KABALE (UNOMUR) 18 MAY 1251Z

TO: GOLO, OIC ADMIN, UNAMIR, NAIROBI INFO: DALLAIRE, FC, UNAMIR

FROM: GOERANSSON, SAO, UNOMUR

SUBJ: REPATRIATION OF UNOMUR'S ZIMBABWE MILOBS

MISC 665

RE YOUR FAX MISC 311 DATED 16 MAY 1994, RECEIVED 18 MAY 1994.

AS INSTRUCTED, PREPARATIONS ARE BEING MADE TO REPATRIATE, AS SOON AS POSSIBLE, THE TEN (10) MILITARY OBSERVERS FROM ZIMBABWE.

WE WILL INFORM YOU OF DEPARTURE DATE AS SOON AS KNOWN.

REGARDS.

COL CKD
NNNN

OIC FC

IN.074

United Nations Observer Mission Uganda/Rwanda
La Mission d'observation des Nations Unies Ouganda/Rwanda

1994 MAY 18 A 5:32

MKF 105

OUTGOING FAX NO. 747
18 MAY 94

PAGE 1 OF 3

TO: MAJ GEN R. A. DALLAIRE FC UNAMIR KIGALI MISC 661	FROM: COL ASHAE ACTING CMO UNOMUR KABALE
FAX NO: (07) 84265	FAX NO: 256 486-23816
SUBJECT: DAILY SITREP COVERING PERIOD 171000 LT MAY TO 181000 LT MAY 94	

I. GENERAL SITUATION

THE UNOMUR OPERATIONAL AREA IS CALM.

II. FACTIONAL ACTIVITIES

A. POLITICAL - NTR

B. MILITARY

1) NRA - NTR

2) RPF - NTR

3) OTHERS - NTR.

III. OWN MILITARY ACTIVITIES

A. HQS - WEEKLY CONFERENCE WITH AREA COMMANDERS AND STAFFS CHAIRED BY ACTING CMO HELD ON 171430 MAY '94.

B. AREAS

(1) EAST/KABALE

(A) STATIC POST

(1) KATUNA- TEAM INDIA UP TO 231000 MAY 94.

(2) LUBIRIZI- TEAM HOTEL UP TO 231100 MAY 94.

ic

ek

(3) KASHEKYE- TEAM HOTEL UP TO 231100 MAY 94.

(4) BIGAGA- TEAM JULIET ON A 24 HOURS BASIS.

(5) MERAMA HILLS- TEAM DELTA ON A 24 HOURS BASIS.

(B) PATROLLING

(1) TEAM ECHO MANNED OP-15 AND OP-16.

(2) TEAM FOXTROT MANNED OP-8 AND OP-9.

(3) TEAM INDIA CARRIED OUT PATROLLING AT E-3 SUBZONE.

(4) TEAM GOLF CARRIED OUT PATROLLING AT F ZONE.

(C) OPERATIONAL ASPECTS - NTR

2) WEST/KISORO

(A) STATIC POST

(1) KYANIKA- TEAM BRAVO UP TO 231000 MAY 94.

(B) PATROLLING

(1) TEAM ALPHA CARRIED OUT TWO PATROLLING IN NGURUNGURU AND BUSANZA AREAS.

(2) TEAM ALPHA CARRIED OUT PATROLLING IN BUSANZA AND NGURUNGURU AREAS.

(3) TEAM ALPHA CARRIED OUT NIGHT PATROLLING IN BUSANZA AND NGURUNGURU AREAS

(4) TEAM CHARLYE CARRIED OUT TWO PATROLLING IN LUGENDABARE AND CHAHAFFY AREAS.

(5) TEAM CHARLYE CARRIED OUT PATROLLING IN CHAHAFFY AND LUGANDABARE AREAS.

(6) TEAM CHARLYE CARRIED OUT NIGHT PATROLLING IN CHAHAFFY AND LUGANDABARE AREAS.

(7) TEAM BRAVO CARRIED OUT FOOT PATROL TO CHAHAFFY.

(8) TEAM BRAVO CARRIED OUT FOOT PATROL TO NGURUNGURU.

(C) OPERATIONAL ASPECTS - NTR.

IV. HUMANITARIAN ACTIVITIES

A.ICRC - SIX (06) VEHICLES CROSSED THE BORDER THROUGH KATUNA ON 17 MAY '94 TO RWANDA AND CAME BACK ON THE SAME DAY.

747 3/3

B. WORLD VISION - NTR

C. WFP - NTR

V. CIVIL AFFAIRS - NTR

VI. LOGISTICS - NTR

VII. MISCELLANEOUS

A. BORDER CROSSINGS:

(1) FROM UGANDA TO RWANDA:

19 VEHICLES (TRUCKS 03, JEEPS/PICK UPS 13, CARS 03) CROSSED THE BORDER THROUGH KATUNA, KASHEKYE AND MERAMA HILLS WITH SIXTY SIX (66) PASSENGERS. NOTHING SIGNIFICANT COULD BE FOUND OUT.

(2) FROM RWANDA TO UGANDA:

13 VEHICLES (TRUCKS 02, JEEPS/PICK UPS 09, CARS 02) CROSSED THE BORDER THROUGH KATUNA AND KASHEKYE WITH NINETY EIGHT (98) PASSENGERS. INCLUDING SIXTY SIX (66) REFUGEES. NOTHING SIGNIFICANT COULD BE FOUND OUT.

B. HELICOPTER SITUATION: ALL THE HELICOPTERS ARE PRESENTLY OPERATIONAL.

VIII. BEST REGARDS.

17 May

IN.068 Page 1 UTC Time: 94-05-17 08:12:23

NL BURUM LES 493131316=FOMU X 17-MAY-1994 08:08:26 246818

ZCZC OUT.026

MKF 077

KABALE (UNOMUR) 17 MAY 0738Z

TO: MGEN DALLAIRE, FC, UNAMIR FROM: COL ABRAR, A/CMO, UNOMUR

SUBJ: DAILY SITREP COVERING PERIOD 161900 LT TO 171[illegible] LT MAY 94

I. GENERAL SITUATION: THE UNOMUR OPERATIONAL AREA IS CALM

II. FACTIONAL ACTIVITIES
A. POLITICAL - NTR
B. MILITARY
1) NRA - NTR
2) RPF - NTR
3) OTHERS - NTR

III. OWN MILITARY ACTIVITIES
A. HQS - (1) DCMO VISITED MERAMA HILLS
B. AREAS
(A) STATIC POST
(1) KATUNA - TEAM INDIA UPTO 231000 MAY 94
(2) LUBIRIZI - TEAM HOTEL UPTO 231100 MAY 94
(3) KSAHEKYE - TEAM HOTEL UPTO 231100 MAY 94
(4) BIGAGA - TEAM JULIET ON 24 HOURS BASIS
(5) MERAMA HILLS - TEAM DELTA ON 24 HOURS BASIS

(B) PATROLLING
(1) TEAM ECHO CARRIED OUT PATROL AT BIGAGA AND MERAMA HILLS ZONES
(2) TEAM FOXTROT CARRIED OUT PATROL AT F-2 AND H-1 SUBZONES
(3) TEAM GOLF CARRIED OUT PATROL IN H-1 SUBZONE
(4) TEAM FOXTROT CARRIED OUT NIGHT PATROL AT F-2 AND H-1 SUBZONES
(5) TEAM FOLF CARRIED OUT NIGHT PATROL AT H-1 SUBZONE

FC E/DIR CMO OPS

(C) OPERATIONAL ASPECTS - NTR

2) WEST/KISORO
(A) STATIC POST
(1) KYANIKA - TEAM BRAVO UPTO 231000 MAY 94

(B) PATROLLING
(1) TEAM ALPHA CARRIED OUT PATROL IN LUGENDABARE AND CHAHAFFY AREAS
(2) TEAM ALPHA CARRIED OUT PATROL IN CHAHAFFY AND LUGENDABARE AREAS
(3) TEAM CHARLIE CARRIED OUT PATROL IN BUSANZA AND NGURUNGURU AREAS
(4) TEAM CHARLIE CARRIED OUT PATROL IN NGURUNGURU AND BUSANZA AREAS
(5) TEAM ALPHA CARRIED OUT NIGHT PATROL IN LUGENDABARE AND CHAHAFFY AREAS
(6) TEAM CHARLIE CARRIED OUT NIGHT PATROL IN NGURUNGURU AND BUSANZA AREAS
(7) TEAM BRAVO CARRIED OUT FOOT PATROL TO NGURUNGURU

(C) OPERATIONAL ASPECTS - NTR

IV. HUMANITARIAN ACTIVITIES
A. ICRC - 03 VEHICLES CROSSED THE BORDER THROUGH KATUNA IN 16 MAY 94 TO RWANDA AND CAME BACK ON THE SAME DAY

B. WORLD VISION - NTR

C. WFP - NTR

V. CIVIL AFFAIRS - NTR

VI. LOGISTICS - NTR

VII. MISCELLANEOUS
A. BORDER CROSSING
(1) FROM UGANDA TO RWANDA
18 VEHICLES (TRUCKS 8, JEEPS/PICKUPS 6, CARS 4) CROSSED THE BORDER AT KATUNA, KASHEKYE AND MERAMA HILLS WITH ONE HUNDRED AND THIRTY FIVE (135) PASSENGERS. INCLUDING TWENTY FOUR (24) REFUGEES. NOTHING SIGNIFICANT COULD BE FOUNT OUT.

(2) FROM RWANDA TO UGANDA
19 VEHICLES (TRUCKS 7, JEEPS/PICKUPS 8, CARS 4) CROSSED THE BORDER AT KATUNA, KASHEKYE AND MERAMA HILLS WITH EIGHTY (80) PASSENGERS. INCLUDING FIVE (5) REFUGEES. NOTHING SIGNIFICANT COULD BE FOUND OUT.

B. HELICOPTER SITUATION: ALL THE HELICOPTERS ARE PRESENTLY OPERATIONAL

C. PATROLLING AND OTHER NORMAL ACTIVITIES HAMPERED DUE TO HEAVY RAINFALL.

VIII. BEST REGARDS

COL CKD
NNNN

IN.068

NYK PLS RELAY TKS

FSM 201-05

United Nations Observer Mission Uganda/Rwanda
La Mission d'observation des Nations Unies Ouganda/Rwanda

MKF 051

OUTGOING FAX NO. 733
16 MAY 94 PAGE 1 OF 3

TO: MAJ GEN R. A. DALLAIRE FC UNAMIR KIGALI MISC 651	FROM: COL ASRAR ACTING CMO UNOMUR KABALE
FAX NO: (07) 84265	FAX NO: 256 486-23816
SUBJECT: DAILY SITREP COVERING PERIOD 151000 LT MAY TO 161000 LT MAY 94	

I. GENERAL SITUATION

THE UNOMUR OPERATIONAL AREA IS CALM.

II. FACTIONAL ACTIVITIES

A. POLITICAL - NTR

B. MILITARY

1) NRA - NTR

2) RPF - ONE RPF COMMANDER NAMED STEAPHEN KANMYISHA CROSSED THE BORDER FROM KYANIKA AND ALLOWED TO DRIVE TOWARDS KISORO BY NRA ON DUTY BEFORE THE UNMO (ON DUTY) REACH FOR CHECKING. THE MATTER HAS BEEN REPORTED TO NRA LO.

3) OTHERS - NTR.

III. OWN MILITARY ACTIVITIES

A. HQS -(1) A/CMO VISITED BIGAGA,CHAYNIKA,KISORO.

(2) D/CMO VISITED BIGAGA OP AND CARRIED OUT AERIAL PATROL ALONG BORDER.

FC E/O.R

B. AREAS

(1) EAST/KABALE

(A) STATIC POST

(1) KATUNA- TEAM GOLF UP TO 161000 MAY 94.

(2) LUBIRIZI- TEAM FOXTROT UP TO 161100 MAY 94.

(3) KASHEKYE- TEAM FOXTROT UP TO 161100 MAY 94.

(4) BIGAGA- TEAM INDIA ON A 24 HOURS BASIS.

(5) MERAMA HILLS- TEAM DELTA ON A 24 HOURS BASIS.

(B) PATROLLING

(1) TEAMS FOXTROT AND DELTA CARRIED OUT PATROLLING IN G-1 SUBZONE.

(2) TEAMS ECHO AND FOXTROT CARRIED OUT PATROLLING G-1 SUBZONES.

(3) TEAM HOTEL CARRIED OUT PATROLLING IN H-1 SUBZONE.

(4) TEAM JULIET CARRIED OUT PATROLLING AT H-1 SUBZONE.

(5) TEAM DELTA CARRIED OUT NIGHT PATROLLING AT F ZONE.

(6) TEAM ECHO CARRIED OUT NIGHT PATROLLING AT F ZONE.

(7) TEAM HOTEL CARRIED OUT NIGHT PATROLLING AT G-2 SUBZONE.

(C) OPERATIONAL ASPECTS - NTR

2) WEST/KISORO

(A) STATIC POST

(1) KYANIKA- TEAM CHARLIE UP TO 161000 MAY 94.

(B) PATROLLING

(1) TEAM ALPHA CARRIED OUT PATROLLING IN BUSANZA, AND CHAHAFFY AREAS.

(2) TEAM BRAVO CARRIED OUT PATROLLING IN BUSANZA, KABINDA AND CHAHAFFY AREAS.

(3) TEAM BRAVO CARRIED OUT NIGHT PATROLLING IN CHAHAFFY AND NGURUNGURU AREAS.

(4) TEAM ALPHA CARRIED OUT NIGHT PATROLLING IN CHAHAFFY AND NGURUNGURU AREAS.

(5) TEAM CHARLIE CARRIED OUT FOOT PATROL TO CHAHAFFY.

(6) AERIAL PATROLLING FROM KISORO - OP-20 - OP-24 - OP-25 - - OP-26 - TO KISORO.

(C) OPERATIONAL ASPECTS - NTR.

IV. HUMANITARIAN ACTIVITIES

A. ICRC - NTR.

B. WORLD VISION - NTR

C. WFP - NTR

V. CIVIL AFFAIRS - NTR

VI. LOGISTICS - NTR

VII. MISCELLANEOUS

A. BORDER CROSSINGS:

(1) FROM UGANDA TO RWANDA:

18 VEHICLES (TRUCKS 02, JEEPS/PICK UPS 10, CARS 06) CROSSED THE BORDER THROUGH KATUNA WITH FORTY THREE (43) PASSENGERS. NOTHING SIGNIFICANT COULD BE FOUND OUT.

(2) FROM RWANDA TO UGANDA:

12 VEHICLES (TRUCKS 02, JEEPS/PICK UPS 06, CARS 04) CROSSED THE BORDER THROUGH KATUNA WITH FORTY (40) PASSENGERS. NOTHING SIGNIFICANT COULD BE FOUND OUT.

B. HELICOPTER SITUATION: ALL THE HELICOPTERS ARE PRESENTLY OPERATIONAL.

C. WE HAVE NOT RECEIVED UNAMIR DAILY SITREP FROM 091800 MAY '94 TO 150600 MAY '94.WOULD APPRECIATE IF WE HAVE THE ABOVE MENTIONED SITREPS.

D. REFER TO PARA II.B.2 OF OUR DAILY SITREP OF 141000 MAY TO 151000 MAY, THE DATE & TIMING OF RPF FIRING WAS ON 141140 MAY '94

VIII. BEST REGARDS.

EUROPEAN COMMISSION

eurostat

STATISTICAL OFFICE OF THE EUROPEAN COMMUNITIES
Directorate A: Dissemination and public relations; computer processing; and relations with ACP countries
Unit : Public relations, dissemination and statistical digests
Tel. (352) 4301-33220, Fax (352) 4301-32594

Reference to be quoted : DG94/A-2/ May, 16, 94
MT/sd/94039P025

Dear Madam, Dear Sir,

Re: "INTEGRATED ENVIRONMENTAL AND ECONOMIC ACCOUNTING"
ISBN 92-1-161359-0

☒ We have an exchange agreement of publications with your organization.
Nous avons un accord d'échange de publications avec votre organisme
Wir haben eine Vereinbarung über den gegenseitigen Austausch von Veröffentlichungen mit Ihrer Organisation.

☐ We receive this title in exchange. However, we have failed to receive the issue(s) shown above.
Nous recevons cette publication à titre d'échange. Toutefois, le(s) numéro sus-mentionnés ne nous sont pas parvenus.
Wir erhalten diese Veröffentlichung in Austausch. Die in der Folge aufgeführten Nummern sind uns nicht zugegangen.

☒ We would like to receive the above publication(s) in exchange.
Nous souhaiterions recevoir sur base d'échange la publication sus-mentionnée.
Vous trouverez en annexe le catalogue de nos publications.
Wir wären sehr interessiert an einen gegenseitigen Veröffentlichungaustausch.
Beiliegend senden wir Ihnen unseren Veröffentlichungsaustausch.
WOULD IT BE POSSIBLE TO RECEIVE 10 COPIES. PLEASE ADVISE.

We thank you for your assistance.
Nous vous remercions de votre collaboration.
Wir danken Ihnen für Ihre Bemühungen.

Yours faithfully,
Avec nos compliments,
Mit freundlichen Grüßen,

M. Täschner-Fernandes

Bâtiment Jean Monnet, rue Alcide de Gasperi, Luxembourg-Kirchberg
Postal address: L-2920 Luxembourg - Tel.: (352) 430 1-1 (switchboard) - Telex COMEUR LU 3423/3446

NYK PLS RELAY TKS

UNAMIR

NKF035

MAY 14 08 44

United Nations Observer Mission Uganda/Rwanda
La Mission d'observation des Nations Unies Ouganda/Rwanda

OUTGOING FAX NO. 726
14 MAY 94

PAGE 1 OF 4

TO: MAJ GEN R. A. DALLAIRE FC UNAMIR KIGALI MISC 645	FROM: COL ASRAR ACTING CMO UNOMUR KABALE
FAX NO: (07) 84265	FAX NO: 256 486-23816
SUBJECT: DAILY SITREP COVERING PERIOD 131000 LT MAY TO 141000 LT MAY 94	

I. GENERAL SITUATION

THE UNOMUR OPERATIONAL AREA IS CALM.

II. FACTIONAL ACTIVITIES

A. POLITICAL - NTR

B. MILITARY

1) NRA - NTR

2) RPF - NTR

3) OTHERS - NTR.

III. OWN MILITARY ACTIVITIES

A. HQS -

(1) DEFENCE ADVISOR OF UK CALLED ON A/CMO AT MISSION HQ ON 130900 MAY '94.

(2) A/CMO VISITED LUBIRIZI OP.

B. AREAS

(1) EAST/KABALE

(A) STATIC POST

FC EDIR OPS

(1) KATUNA- TEAM GOLF UP TO 161000 MAY 94.

(2) LUBIRIZI- TEAM FOXTROT UP TO 161100 MAY 94.

(3) BIGAGA- TEAM INDIA ON A 24 HOURS BASIS.

(4) KASHEKYE- TEAM FOXTROT UP TO 161100 MAY 94.

(B) PATROLLING

(1) TEAMS ECHO AND DELTA CARRIED OUT PATROLLING IN F ZONE.

(2) TEAM HOTEL CARRIED OUT PATROLLING IN H-1 SUBZONE.

(3) TEAMS HOTEL AND JULIET CARRIED OUT PATROLLING IN G-1 SUBZONE.

(4) TEAMS DELTA AND ECHO CARRIED OUT NIGHT PATROLLING AT G-1 SUBZONE.

(5) TEAMS HOTEL AND JULIET CARRIED OUT NIGHT PATROLLING AT H-1 SUBZONE.

(6) TEAM GOLF CARRIED OUT NIGHT PATROLLING AT E-3 SUBZONE.

(7) TEAM DELTA CARRIED OUT FOOT PATROLLING FROM OP-5 TO OP-7.

(8) TEAM ECHO CARRIED OUT FOOT PATROLLING FROM GRID 7454 TO GRID 7245.

(C) OPERATIONAL ASPECTS - NTR

2) WEST/KISORO

(A) STATIC POST

(1) KYANIKA- TEAM CHARLYE UP TO 161000 MAY 94.

(B) PATROLLING

(1) TEAM ALFA CARRIED OUT PATROLLING IN BUSANZA, KABINDI AND CHAHAFFY AREAS.

(2) TEAM BRAVO CARRIED OUT PATROLLING IN NGURUNGURU AND BUSANZA AREAS.

(3) TEAM BRAVO CARRIED OUT NIGHT PATROLLING IN CHAHAFFY AND NGURUNGURU AREAS.

(4) TEAM ALFA CARRIED OUT NIGHT PATROLLING IN LUGENDABARE AND NGURUNGURU AREAS.

(5) TEAM CHARLYE CARRIED OUT FOOT PATROL FROM CHAHAFFY TO BP #7.

(C) OPERATIONAL ASPECTS - NTR.

IV. HUMANITARIAN ACTIVITIES

A. ICRC - ONE ICRC (01) CAR WENT TO RWANDA AND RETURNED TO KABALE THROUGH KATUNA CP.

B. WORLD VISION - ONE VEHICLE WENT TO RWANDA AND RETURNED TO KABALE THROUGH KATUNA CP.

C. MEETING -

(1) ONE MEETING OF VARIOUS HUMANITARIAN AGENCIES WAS HELD AT MULINDI/RWANDA RPF HQ ON 13 MAY '94. A TOTAL OF 10 CARS WENT TO RWANDA AND RETURNED TO KABALE THROUGH KATUNA.

(2) A COORDINATION MEETING BETWEEN NGO's WILL BE HELD AT UNOMUR HQ ON 142000 MAY '94.

V. CIVIL AFFAIRS - NTR

VI. LOGISTICS - NTR

VII. MISCELLANEOUS

A. BORDER CROSSINGS:

(1) FROM UGANDA TO RWANDA:

21 VEHICLES (TRUCKS 03, JEEPS/PICK UPS 14, CARS 04) CROSSED THE BORDER THROUGH KATUNA AND KASHAKYE WITH ONE HUNDRED AND SEVENTY FOUR (174) PASSENGERS, INCLUDING NINETY THREE (93) REFUGEES.

(2) FROM RWANDA TO UGANDA:

25 VEHICLES (TRUCKS 03, JEEPS/PICK UPS 17, CARS 05) CROSSED THE BORDER THROUGH KATUNA WITH NINETY TWO (92) PASSENGERS. NOTHING SIGNIFICANT COULD BE FOUND OUT.

B. HELYICOPTER SITUATION: ALL THE HELICOPTERS ARE PRESENTLY OPERATIONAL.

C. MIRAMA HILLS: MIRAMA HILLS/KAKITUMBA WILL BE MONITORED FROM TODAY. WE ARE ESTABLISHING A TEMPORARY OP ON 24 HOURS ROTATION AT KAKITUMBA.

VIII. BEST REGARDS.

NYK PLS RELAY TKS

UNAMIR

1994 MAY 12 08

MKF 011

United Nations Observer Mission Uganda/Rwanda
La Mission d'observation des Nations Unies Ouganda/Rwanda

OUTGOING FAX NO. 711
12 MAY 94

PAGE 1 OF 3

TO: MAJ GEN R. A. DALLAIRE FC UNAMIR KIGALI MISC 634	FROM: COL ASRAR ACTING CMO UNOMUR KABALE
FAX NO: (07) 84265	FAX NO: 256 486-23816
SUBJECT: DAILY SITREP COVERING PERIOD 111000 LT MAY TO 121000 LT MAY 94	

12/05/94

I. GENERAL SITUATION

THE UNOMUR OPERATIONAL AREA IS CALM.

II. FACTIONAL ACTIVITIES

A. POLITICAL - NTR

B. MILITARY

1) NRA - MOVEMENT IN THE MERAMA HILL AREA IS STILL RESTRICTED BY NRA.

2) RPF - NTR

3) OTHERS - NTR.

III. OWN MILITARY ACTIVITIES

A. BOS - CMP HAS A MEETING WITH ARMY COMMANDER, UGANDA ON 12 MAY '94 AT 0900 HRS.

B. AREAS

(1) EAST/KABALE

FC OPS EMR

(A) STATIC POST

(1) TEAM GOLF AT KATUNA UP TO 161000 MAY 94.

(2) TEAM FOXTROT AT LUBIRIZI AND KASHEKYE UP TO 161100 MAY 94.

(3) TEAM INDIA AT BIGAGA (SQ 9137) ON A 24 HOURS BASIS.

(B) PATROLLING

(1) TEAMS DELTA AND ECHO CARRIED OUT PATROLLING IN H ZONE.

(2) TEAM HOTEL CARRIED OUT PATROLLING IN F ZONE AND G-1 SUBZONE.

(3) TEAM ECHO CARRIED OUT PATROLLING IN H ZONE.

(4) TEAM JULIET CARRIED OUT PATROLLING IN F ZONE.

(5) TEAM GOLF CARRIED OUT NIGHT PATROLLING AT E-3 SUBZONE.

(6) TEAM HOTEL CARRIED OUT NIGHT PATROLLING AT F ZONE.

(7) TEAM JULIET CARRIED OUT NIGHT PATROLLING AT F ZONE.

(8) TEAM DELTA CARRIED OUT FOOT PATROLLING FROM OP 5 TO OP 7.

(9) TEAM ECHO CARRIED OUT FOOT PATROLLING FROM OP 3 TO KASHEKYE.

(C) OPERATIONAL ASPECTS - NTR

2) WEST/KISORO

(A) STATIC POST

(1) TEAM CHARLY AT KYANIKA UP TO 161000 MAY 94.

(B) PATROLLING

(1) TEAM BRAVO CARRIED OUT PATROLLING IN BUSANZA, KABINDI AND CHAHAFFY AREAS.

(2) TEAM ALFA CARRIED OUT PATROLLING IN NGURUNGURU AND LUGENDABARE AREAS.

(3) TEAM BRAVO CARRIED OUT NIGHT PATROLLING IN CHAHAFFY AND LUGENDABARE AREAS.

(4) TEAM ALFA CARRIED OUT NIGHT PATROLLING IN LUGENDABARE AND NGURUNGURU AREAS.

TOTAL P.03

(5) TEAM CHARLY CARRIED OUT FOOT PATROL TO NGURUNGURU.

(6) AIR PATROLLING FROM KISORO - OP 20 - OP 19 - OP 18 - - OP 17 - TO KISORO.

(C) OPERATIONAL ASPECTS - NTR.

IV. HUMANITARIAN ACTIVITIES - NTR.

V. CIVIL AFFAIRS - NTR

VI. LOGISTICS - NTR

VII. MISCELLANEOUS

A. BORDER CROSSINGS:

(1) FROM UGANDA TO RWANDA:

19 VEHICLES (TRUCKS 04, JEEPS/PICK UPS 12, CARS 03) CROSSED THE BORDER THROUGH KATUNA AND KASHAKYE WITH ONE HUNDRED AND NINETY FOUR (194) PASSENGERS, INCLUDING SEVENTY FIVE (75) REFUGEES.

(2) FROM RWANDA TO UGANDA:

23 VEHICLES (TRUCKS 04, JEEPS/PICK UPS 15, CARS 04) CROSSED THE BORDER THROUGH KATUNA AND KASEKYE WITH SEVENTY TWO (72) PASSENGERS, INCLUDING TWENTY (20) REFUGEES. NOTHING SIGNIFICANT COULD BE FOUND OUT.

B. HELYICOPTER SITUATION: TWO HELICOPTERS ARE PRESENTLY OPERATIONAL.

VIII. BEST REGARDS.

(FC) OPS EDIR

NKF 004

IN.065 Page 1 UTC Time: 94-05-11 09:36:20

UNAMIR

NL BURUM LES 493131318=FOMU X 11-MAY-1994 09:27:37 215657

94 MAY 11 09 38

ZCZC OUT.025

KABALE (UNOMUR) 11 MAY 0843Z

TO: MGEN DALLAIRE, FC, UNAMIR FROM: COL ASRAR, A/CMO, UNOMUR

SUBJ: DAILY SITREP COVERING PERIOD 101000 LT TO 111000 LT MAY 1994

MISC 631

I. GENERAL SITUATION: THE UNOMUR OPERATIONAL AREA IS CALM.

II. FACTIONAL ACTIVITIES
A. POLITICAL - NTR
B. MILITARY
1) NRA - MOVEMENT IN THE MERAMA HILL AREA IS STILL RESTRICTED BY NRA.
2) RPF - NTR
3) OTHERS - NTR

III. OWN MILITARY ACTIVITIES
A; HQS - NTR
B. AREAS
(A) STATIC POST
(1) TEAM GOLF AT KATUNA UPTO 161000 MAY 94.
(2) TEAM FOXTROT AT LUBIRIZI AND KASHEKYE UPTO 161100 MAY 94.
(3) TEAM INDIA AT BIGAGA (SQ 9137) ON A 24 HOUR BASIS.

(B) PATROLLING
(1) TEAMS DELTA AND ECHO CARRIED OUT PATROLLING IN H AREA ROUTE: RWENTOBO - NGONA - KAHANDA KANWE.
(2) TEAM HOTEL CARRIED OUT PATROLLING IN G-1 SUBZONE AND LUBIRIZI - KASHEKYE ROAD.
(3) TEAM GOLF CARRIED OUT NIGHT PATROLLING AT E-3 SUBZONE.
(4) TEAMS HOTEL AND JULIET CARRIED OUT NIGHT PATROLLING IN F ZONE.
(5) TEAMS DELTA AND ECHO CARRIED OUT NIGHT PATROLLING AT H ZONE.
(6) TEAM ECHO CARRIED OUT FOOT PATROLLING FROM OP 2 TO OP 5.
(7) TEAM HOTEL CARRIED OUT FOOT PATROLLING FROM OP 2 TO KASHAKYE.
(8) TEAM JULIET CARRIED OUT FOOT PATROLLING FROM OP 11 TO KATUNA.

(C) OPERATIONAL ASPECTS - NTR

2) WEST/KISORO
(A) STATIC POST
(1) TEAM CHARLIE AT KYANIKA UPTO 161000 MAY 94.

(B) PATROLLING
(1) TEAM BRAVO CARRIED OUT PATROLLIN IN NGURUNGURU AND LUGENDABARE AREAS.
(2) TEAM LAFA CARRIED OUT PATROLLING IN NGURUNGURU AND LUGENDABARE AREAS.
(3) TEAM BRAVO CARRIED OUT NIGHT PATROLLING IN BUSANZA LUGENDABARE, KABINDI AND CHAHAFFY AREAS.
(4) TEAM ALFA CARRIED OUT NIGHT PATROLLING IN CHAHAFFY AND LUGENDABARE AREAS.
(5) TEAM CHARLIE CARRIED OUT FOOT PATROLLING FROM CHAHAFFY TO BP 7.
(6) AIR PATROLLING FROM KISORO - OP 24 - OP 22 - OP 21 - OP 18 AND BACK TO KISORO.

(C) OPERATIONAL ASPECTS - NTR

IV. HUMANITARIAN ACTIVITIES - NTR

V. CIVIL AFFAIRS - NTR

VI. LOGISTICS - NTR

VII. MISCELLANEOUS
A. BORDER CROSSINGS:
(1) FROM UGANDA TO RWANDA
27 VEHICLES (TRUCKS 03, JEEPS/PICK UPS 19, CARS 05) CROSSED THE BORDER THROUGH KATUNA AND KASHAKYE WITH SEVENTY FOUR (74) PASSENGERS AND ONE HUNDRED AND FORTY THREE (143) REFUGEES.

(2) FROM RWANDA TO UGANDA
27 VEHICLES (TRUCKS 04, JEEPS/PICK UPS 10, CARS 13) CROSSED THE BORDER THROUGH KATUNA AND KASHEKYE WITH NINETY (90) PASSENGERS. NOTHING SIGNIFICANT COULD BE FOUND OUT.

B. HELICOPTER SITUATION: TWO HELICOPTERS ARE PRESENTLY OPERATIONAL.

VIII. BEST REGARDS.

COL CKD
NNNN

IN.065

NYR PLS RELAY TKS

UNAMIR

United Nations Observer Mission Uganda/Rwanda
La Mission d'observation des Nations Unies Ouganda/Rwanda

MKF 1086

OUTGOING FAX NO. 696
10 MAY 94

PAGE 1 OF 3

TO: MAJ GEN R. A. DALLAIRE FC UNAMIR KIGALI MISC 624	FROM: for COL ASRAR ACTING CMO UNOMUR KABALE DCMO 10/05/94
FAX NO: (07) 84265	FAX NO: 256 486-23816
SUBJECT: DAILY SITREP COVERING PERIOD 091000 LT MAY TO 101000 LT MAY 94	

I. GENERAL SITUATION

THE UNOMUR OPERATIONAL AREA IS CALM.

II. FACTIONAL ACTIVITIES

A. POLITICAL - NTR

B. MILITARY

1) NRA - MOVEMENT IN THE MERAMA HILL AREA IS STILL RESTRICTED BY NRA.

2) RPF - NTR

3) OTHERS - NTR.

II. OWN MILITARY ACTIVITIES

A. HQS - NTR

B. AREAS

(1) EAST/KABALE

(A) STATIC POST

(1) TEAM GOLF AT KATUNA UP TO 161000 MAY 94.

(2) TEAM FOXTROT AT LUBIRIZI AND KASHEKYE UP TO 161100 MAY 94.

1994 MAY 10 A 3:58

FL ops EDIR

(3) TEAM INDIA AT BIGAGA (SQ 9137) ON A 24 HOURS BASIS.

(B) PATROLLING

(1) TEAMS DELTA AND ECHO CARRIED OUT PATROLLING IN H AREA ROUTE : RWENTOBO - NGONA - KAHANDA KAMWE.

(2) TEAMS HOTEL AND JULIET CARRIED OUT PATROLLING IN F ZONE.

(3) TEAM INDIA CARRIED OUT PATROLLING AT E-3 SUBZONE.

(4) TEAM GOLF CARRIED OUT NIGHT PATROLLING AT E SUBZONE.

(5) TEAMS HOTEL AND JULIET CARRIED OUT NIGHT PATROLLING AT F ZONE.

(C) OPERATIONAL ASPECTS - NTR

2) WEST/KISORO

(A) STATIC POST

(1) TEAM CHARLY AT KYANIKA UP TO 161000 MAY 94.

(B) PATROLLING

(1) TEAM BRAVO CARRIED OUT PATROLLING IN NGURUNGURU CHAHAFFY AND LUGENDABARE AREAS.

(2) TEAM BRAVO CARRIED OUT NIGHT PATROLLING IN NKURUNGURU AREA.

(3) TEAM ALFA CARRIED OUT NIGHT PATROLLING IN CHAHAFFY AND NKURUNGURU AREA.

(4) TEAM CHARLY CARRIED OUT FOOT PATROL FROM CHAHAFFY TO BP 7.

(C) OPERATIONAL ASPECTS - NTR.

IV. HUMANITARIAN ACTIVITIES - NTR.

V. CIVIL AFFAIRS - NTR

VI. LOGISTICS - NTR

VII. MISCELLANEOUS

A. BORDER CROSSINGS:

(1) FROM UGANDA TO RWANDA: 23 VEHICLES (TRUCKS 03, JEEPS/PICK UPS 11, CAR 09) CROSSED THE BORDER THROUGH KATUNA AND KASHAKYE WITH ONE HUNDRED AND THIRTY (130) PASSENGERS.

(2) FROM RWANDA TO UGANDA:

24 VEHICLES (TRUCKS 05, JEEPS/PICK UPS 07, CARS 12) CROSSED THE BORDER THROUGH KATUNA AND KASEKYE WITH SEVENTY (70) PASSENGERS. NOTHING SIGNIFICANT COULD BE FOUND OUT.

B. HELICOPTER SITUATION: TWO HELICOPTERS ARE PRESENTLY OPERATIONAL.

VII. BEST REGARDS.

NYK PLS RELAY TKS

UNOMUR MONUOR

United Nations Observer Mission Uganda/Rwanda
La Mission d'observation des Nations Unies Ouganda/Rwanda

MKF 1083

OUTGOING FAX NO.: 691

9 MAY 1994

TO: MGEN DALLAIRE FORCE COMMANDER UNAMIR KIGALI MISC 626	FROM: COL ASKAR ACTING CMO UNOMUR KABALE
FAX NO: (07) 84255	FAX NO: 256 486-23818

SUBJECT: WEEKLY REPORT FROM 02 MAY TO 08 MAY 1994

1. GENERAL SITUATION AND HIGHLIGHTS

THE GENERAL SITUATION IN UNOMUR OPERATIONAL AREA CONTINUES TO BE CALM. THERE IS NO SIGNIFICANT CHANGE.

2. MILITARY

(A) DEPLOYMENT

(1) HQ/CP

(A) WEEKLY CONFERENCE WITH AREA COMMANDERS AND STAFFS CHAIRED BY ACTING CMO HELD ON 041430 MAY 1994.

(B) THE ACTING CMO RETURNED FROM KAMPALA ON 031345 MAY 1994. HE MET THE NRA COMMANDER, DA OF UK AND CHARGÉ DE AFFAIRES OF USA DURING HIS

KL EDIE 00

STAY AT KAMPALA (REFER TO OUR CODE CABLE 595 DATED 3 MAY 1994)

(C) THE ACTING CMO VISITED KATUNA AND OP1 (SQ 2180) ON 041100 MAY 1994.

(D) THE ACTING CMO HELD A CONFERENCE WITH THE TEAM LEADERS, AREA COMMANDER AND STAFFS OF AREA EAST ON 071600 MAY 1994.

(E) THE ACTING CMO WENT TO MBARARA TO MEET THE DIVISION COMMANDER ON 050800 MAY 1994.

(2) OP/CP

A. CYANIKA
B. KATUNA
C. LUBIRIZI
} PERMANENT ON WEEKLY ROTATION

D. BIGAGA
E. KACHAKYE
} PERMANENT ON DAILY ROTATION

(3) PATROLS

DURING THE PERIOD PATROLLING WERE CARRIED OUT AS FOLLOWS:

A.	MOBILE PATROLS	40
B.	FOOT PATROLS	11
C.	NIGHT PATROLS	39
	TOTAL	90

(4) HELICOPTER MISSIONS (UPTO 08 MAY)

A. HOURS FLOWN 12'42

B. TOTAL PASSENGERS 113

C. TOTAL LOAD 310 KG

D. TOTAL AIR MISSIONS 20.

(5) DETAILS OF VEHICLES AND PERSONNEL CROSSED THE BORDER

OPS	NO OF VEHICLES CROSSED THE BORDER		NO OF PEOPLE CROSSED THE BORDER		WITH LOAD
	TO RWANDA	TO UGANDA	TO RWANDA	TO UGANDA	
KATUNA	104 *21	128	327	403	* BELONGS TO WFP AND ICRC. CARRYING FOOD STUFFS
LUBIRIZI/ KASHEKYE	09 *5-	12	25	112	* BELONGS TO WFP. CARRYING FOOD STUFFS
BIGAGA	.	-	.	.	
KAFUNZO	.	.	.	.	

(B) PERSONNEL

(1) STRENGTH

TOTAL 81.

(A) AVAILABLE

66.

(B) CASUALTIES

NIL.

(2) LEAVE/CTO

13.

(3) MEDICAL SITUATION

ALL OUR MILITARY AND CIVIL PERSONNEL ARE IN GOOD HEALTH.

(C) RELATIONS WITH NRA

(1) NRA IS NOT ALLOWING OUR PATROL TO REACH MERAMA HILLS. AT NIGHT THEY ARE NOT ALLOWING US TO CROSS BEYOND KAMWEZI AREA.

(2) REFER OUR CODE CABLE NO.618 DATED 08 MAY 1994.

3. VIOLATIONS, INCIDENTS AND COMPLAINTS

NTR

4. POLITICAL

NTR

5. ADMINISTRATIVE AND LOGISTICAL SUPPORT

ALL THE HELICOPTERS WERE GROUNDED ON 04 MAY FOR MAINTENANCE (REFERENCE TO OUR SITREP OF 05 MAY 1994). ONE HELICOPTER IS OPERATIONAL FROM TODAY AND WE ARE EXPECTING ONE MORE TO BE OPERATIONAL BY 10 MAY 1994.

6. **LIAISON, CONTACTS AND MEDIA**

NTR.

7. **OBSERVATIONS/COMMENTS**

ATTENTION IS INVITED TO OUR CODE CABLE NO. 819 DATED 09 MAY 1994).

8. BEST REGARDS.

NYK PLS RELAY TKS

UNAMIR

MKF1068

1994 MAY -8 10 40

United Nations Observer Mission Uganda/Rwanda
La Mission d'observation des Nations Unies Ouganda/Rwanda

OUTGOING FAX NO. 686
08 MAY 94

TO: MAJ GEN R. A. DALLAIRE FC UNAMIR KIGALI MISC 616	FROM: COL ASRAR ACTING CMO UNOMUR KABALE
FAX NO: (07) 84265	FAX NO: 256 486-23816
SUBJECT: DAILY SITREP COVERING PERIOD 071000 LT MAY TO 081000 LT MAY 94	

I. **GENERAL SITUATION**

THE UNOMUR OPERATIONAL AREA IS CALM.

II. **FACTIONAL ACTIVITIES**

A. POLITICAL - NTR

B. MILITARY

1) NRA - MOVEMENT IN THE MERAMA HILL AREA IS STILL RESTRICTED BY NRA.

2) RPF - NTR

3) OTHERS - NTR.

II. **OWN MILITARY ACTIVITIES**

A. HQS - A/CMO MEET ALL TEAM LEADERS OF AREA EAST AND BRIEFED THEM ON CURRENT OP SITUATION.

B. AREAS

1) EAST/KABALE

(A) STATIC POST

(1) TEAM DELTA AT KATUNA UP TO 08 MAY 94.

(2) TEAM ECHO AT LUBIRIZI AND KASHEKYE UP TO 08 MAY 94.

(3) TEAM HOTEL AT BIGAGA (SQ 9137) ON A 24 HOURS BASIS.

(B) PATROLLING

(1) TEAMS INDIA AND JULIET CARRIED OUT PATROLLING IN KABALE RIVER AREA.

(2) TEAMS FOXTROT AND DELTA CARRIED OUT NIGHT PATROLLING IN E-3 SUBZONE.

(C) OPERATIONAL ASPECTS - PROBLEMS OF COMMS WITH MIKE IN RUBAYA AND BIGAGA AREAS.

2) WEST/KISORO

(A) STATIC POST

(1) TEAM ALFA AT KYANIKA UP TO 09 MAY 94.

(B) PATROLLING

(1) TEAM BRAVO CARRIED OUT PATROLLING IN LUGENDABARE CHAHAFFY AND NGURUNGURU AREAS.

(2) TEAM CHARLIE CARRIED OUT PATROLLING IN LUGENDABARE AND NKURUNGURU AREAS.

(3) STAFF CARRIED OUT DAY PATROL TO BUSANZA - KABINDI ROAD - KISORO AND NIGHT PATROLLING TO BUSANZA AND CHAHAFFY.

(4) TEAM BRAVO CARRIED OUT NIGHT PATROLLING TO CHAHAFFY AND NKURUNGURU.

(5) TEAM ALFA CARRIED OUT FOOT PATROL FROM CYANIKA TO NKURUNGURU.

(C) OPERATIONAL ASPECTS - NTR.

IV. HUMANITARIAN ACTIVITIES - NTR.

V. CIVIL AFFAIRS - NTR

VI. LOGISTICS - NTR

VII. MISCELLANEOUS

A. BORDER CROSSINGS:

(1) FROM UGANDA TO RWANDA:

24 VEHICLES (TRUCKS 04,JEEPS/PICK UPS 18,CARS 02) CROSSED THE BORDER THROUGH KATUNA WITH SEVENTY THREE (73) PASSENGERS.

NOTHING SIGNIFICANT COULD BE FOUND OUT.

(2) FROM RWANDA TO UGANDA:

15 VEHICLES (TRUCKS 04, JEEPS/PICK UPS 11) CROSSED THE BORDER THROUGH KATUNA WITH FORTY THREE (43) PASSENGERS. NOTHING SIGNIFICANT COULD BE FOUND OUT.

(3) REFUGEES:

NO MOVEMENT.

B. OUR PATROL ACTIVITIES ARE STILL NEGATIVELY AFFECTED DUE TO HEAVY RAINFALL.

VIII. BEST REGARDS.

MKF 1059

NYK PLS RELAY TKS

UNAMIR

94 MAY -6 13 09 28

United Nations Observer Mission Uganda/Rwanda
La Mission d'observation des Nations Unies Ouganda/Rwanda

OUTGOING FAX NO. 685
07 MAY 94

TO: MAJ GEN R. A. DALLAIRE FC UNAMIR KIGALI MISC 615	FROM: COL ASBAR ACTING CMO UNOMUR KABALE
FAX NO: (07) 84265	FAX NO: 256 486-23816
SUBJECT: DAILY SITREP COVERING PERIOD 061000 LT MAY TO 071000 LT MAY 94	

I. **GENERAL SITUATION**

THE UNOMUR OPERATIONAL AREA IS CALM.

II. **FACTIONAL ACTIVITIES**

A. POLITICAL - NTR

B. MILITARY

1) NRA - NRA IS STILL NOT PROVIDING US WITH THE REQUIRED NUMBER OF GUARDS FOR THE PATROLS. THIS IS AFFECTING OUR OPERATIONS. MOVEMENT IN THE MERAMA HILL AREA IS STILL RESTRICTED BY NRA.

2) RPF - NTR

3) OTHERS - NTR.

II. **OWN MILITARY ACTIVITIES**

A. HQS - A/CMO VISITED NRA DIVISIONAL COMMANDER AT MBARARA AND DISCUSSED MATTERS RELATING TO COOPERATION OF NRA.

B. AREAS

FC

1) EAST/KABALE

(A) STATIC POST

(1) TEAM DELTA AT KATUNA UP TO 08 MAY 94.

(2) TEAM ECHO AT LUBIRIZI AND KASHEKYE UP TO 08 MAY 94.

(3) TEAM HOTEL AT BIGAGA (SQ 9137) ON A 24 HOURS BASIS.

(B) PATROLLING

(1) TEAMS FOXTROT AND GOLF CARRIED OUT PATROLLING IN KABALE RIVER AREA.

(2) TEAM INDIA AND TEAM JULIET CARRIED OUT PATROLLING IN F-ZONE.

(3) TEAMS GOLF AND INDIA CARRIED OUT NIGHTPATROLLING IN F ZONE; TEAM JULIET AT E-3 SUBZONE.

(C) OPERATIONAL ASPECTS - NTR.

2) WEST/KISORO

(A) STATIC POST

(1) TEAM ALFA AT KYANIKA UP TO 09 MAY 94.

(B) PATROLLING

(1) TEAM BRAVO CARRIED OUT PATROLLING IN LUGENDABARE AND NGURUNGURU AREAS.

(2) TEAM CHARLIE CARRIED OUT PATROLLING IN LUGENDABARE AND CHAHAFY AREAS.

(3) TEAM CHARLIE CARRIED OUT NIGHT PATROLLING IN NKURUNGURU AND LUGENDABARE AREAS.

(4) HQ STAFF CARRIED OUT NIGHT PATROLLING IN BUSANZA AND CHAHAFI AREAS.

(5) TEAM ALFA CARRIED OUT FOOTPATROLS IN NGURUNGURU AREA

(C) OPERATIONAL ASPECTS - NTR.

IV. HUMANITARIAN ACTIVITIES -

(1) SIX (06) VEHICLES OF ICRC CROSSED THE BORDER THROUGH KATUNA ON 060830 MAY'94 TO RWANDA AND CAME BACK ON 061900 MAY'94 AFTER DELIVERING MEDICAL SUPPLIES.

(2) SIX (06) VEHICLES OF ICRC CROSSED THE BORDER THROUGH KATUNA ON 060900 MAY 94 TO RWANDA AND CAME BACK ON 070845 AFTER DELIVERING MEDICAL SUPPLIES.

V. CIVIL AFFAIRS - NTR

VI. LOGISTICS - NTR

VII. MISCELLANEOUS

A. BORDER CROSSINGS:

(1) FROM UGANDA TO RWANDA:

21 VEHICLES (TRUCKS 03,JEEPS/PICK UPS 12,CARS 06) CROSSED THE BORDER THROUGH KATUNA WITH FOURTY NINE (49) PASSENGERS. NOTHING SIGNIFICANT COULD BE FOUND OUT.

(2) FROM RWANDA TO UGANDA:

31 VEHICLES (TRUCKS 05, JEEPS/PICK UPS 22, AND CAR 04) CROSSED THE BORDER THROUGH KATUNA WITH EIGHTY THREE (83) PASSENGERS. NOTHING SIGNIFICANT COULD BE FOUND OUT.

(3) REFUGEES:

A SMALL NUMBER OF REFUGEES (08) CROSSED THE BORDER THROUGH KATUNA, DESTINATION KIGALI.

B. OUR PATROL ACTIVITIES ARE NEGATIVELY AFFECTED DUE TO HEAVY RAINFALL.

VIII. BEST REGARDS.

NYK PLS RELAY TKS MKT 1056

UNAMIR

'94 MAY -6 13 05 12

OPERATIONS
SITUATION CENTRE
HEADQUARTERS

United Nations Observer Mission Uganda/Rwanda
La Mission d'observation des Nations Unies Ouganda/Rwanda

A 8:47

OUTGOING FAX NO. 683
06 MAY 94 MISC 613 PAGE 1 OF 4

TO: MAJ GEN R. A. DALLAIRE FC UNAMIR KIGALI	FROM: COL ASRAR ACTING CMO UNOMUR KABALE
FAX NO: (07) 84265	FAX NO: 256 486-23816
SUBJECT: DAILY SITREP COVERING PERIOD 051000 LT MAY TO 061000 LT MAY 94	

I. GENERAL SITUATION

THE UNOMUR OPERATIONAL AREA IS CALM.

II. FACTIONAL ACTIVITIES

A. POLITICAL - NTR

B. MILITARY

1) NRA -NRA INFORMED THAT THEY ARE UNABLE TO PROVIDE US WITH THE REQUIRED NUMBER OF GUARDS FOR THE PATROLS.

2) RPF - NTR

3) OTHERS - NTR.

As usual are we doing about it?

II. OWN MILITARY ACTIVITIES

A. HQS -

THE ACTING CMO LEFT FOR MBARARA TO MEET THE DIVISION COMMANDER.

B. AREAS

1) EAST/KABALE

A) STATIC POST

Spoken to Col Asrar

COO HAC

See notes/action

So

Pse note the details up para IV and return to FC.

FC

(1) TEAM DELTA AT KATUNA UP TO 08 MAY 94.

(2) TEAM ECHO AT LUBIRIZI AND KASHEKYE UP TO 08 MAY 94.

(3) TEAM HOTEL MANNED BIGAGA (SQ 9137) FOR 24 HOURS.

(B) PATROLLING

(1)TEAMS FOXTROT AND GOLF CARRIED OUT PATROLLING IN KABALE RIVER AREA.

(2) TEAM INDIA CARRIED OUT PATROLLING IN F-ZONE.

(3) TEAM JULIET CARRIED OUT PATROLLING IN E-2 SUBZONE.

(4) TEAMS FOXTROT AND GOLF CARRIED OUT NIGHT PATROLLING IN E-1 AND E-2 SUBZONE.

(5) TEAMS DELTA AND INDIA CARRIED OUT NIGHT PATROLLING IN E-3 SUBZONE.

(6) TEAM JULIET CARRIED OUT NIGHT PATROLLING IN F ZONE.

(C) OPERATIONAL ASPECTS - NTR.

2) WEST/KISORO

(A) STATIC POST

(1) TEAM ALFA AT KYANIKA UP TO 09 MAY 94.

(B) PATROLLING

(1) TEAM BRAVO CARRIED OUT PATROLLING IN LUGENDABARE AND NKURUNGURU AREAS.

(2) TEAM CHARLIE CARRIED OUT PATROLLING IN BUSANZA, LUGENDABARE AND CHAHAFY AREAS.

(3) HQ STAFFS CARRIED OUT NIGHT PATROLLING IN NKURUNGURU AND LUGENDABARE AREAS.

(4) TEAM BRAVO CARRIED OUT NIGHT PATROLLING IN NKURUNGURU AND LUGENDABARE AREAS.

(5) TEAM ALFA CARRIED OUT NIGHT PATROLLING FROM

CHAHAFY TO BP-7.

(C) OPERATIONAL ASPECTS - NTR.

IV. HUMANITARIAN ACTIVITIES -

HAC ope

(1) SEVEN(07) VEHICLES OF ICRC CROSSED THE BORDER THROUGH KATUNA ON 050945 MAY'94 TO RWANDA AND CAME BACK ON 051145 MAY'94 AFTER DELIVERING THE FOOD STUFFS.

(2)FIVE(05) VEHICLES OF WFP CROSSED THE BORDER THROUGH KASHAKYE ON 051400 MAY'94 AND CAME BACK ON 060200 MAY'94 AFTER DELIVERING FOOD STUFFS TO MULINDI.

V. CIVIL AFFAIRS - NTR

VI. LOGISTICS - NTR

VII. MISCELLANEOUS

A. BORDER CROSSINGS:

(1) FROM UGANDA TO RWANDA:

14 VEHICLES (TRUCKS-01,JEEPS/PICK UPS-13)CROSSED THE BORDER THROUGH KATUNA AND LUBIRIZI AREA WITH NINETY ONE(91) PASSENGERS.NOTHING SIGNIFICANT COULD BE FOUND OUT.

(2) FROM RWANDA TO UGANDA:

14 VEHICLES (TRUCKS 04, JEEPS/PICK UPS 09,AND CAR 01) CROSSED THE BORDER THROUGH KATUNA AND KASHAKYE OP WITH NINETY FOUR(94) PASSENGERS.NOTHING SIGNIFICANT COULD BE FOUND OUT.

B. OUR PATROL ACTIVITIES ARE NEGATIVELY AFFECTED DUE TO HEAVY RAINFALL.

VIII. BEST REGARDS.

A. DATE OF BORDERCROSSING 05 MAY'94

B. PLACE OF BORDERCROSSING(GRIDS) KASHAKYE & KATUNA

C.NUMBER OF MEN WITH ESTIMATE OF AGE (20 TO 35) 11 & 06

D.NUMBER OF WOMEN 07 & 08

E.NUMBER OF CHILDREN 24 & 04

F.NUMBER OF FAMILIES 15 & 01

G.TOTAL STRENGTH THAT DAY/THAT PLACE 42 & 18

H.TOTAL STRENGTH SINCE BEGINING OF THE REPORTING 480

I.WAY OF CROSSING VEHICLE

J.EQUIPMENT HOUSE HOLD ITEMS

K.FOOD NTR

L.FURNITURE NTR

M.CATTLE OR OTHER ANIMAL NTR

N.ARMS(?) NTR

O.ATTITUDE FRIENDLY

P.MISCELLANEOUS NTR

UNAMIR
94 MAY -3 08 07
MKF993

NL BURUM LES 493131318=FOMU X 3-MAY-1994 08:02:22 163902

ZCZC OUT.019

KABALE (UNOMUR) 03 MAY 0744Z

TO: MGEN DALLAIRE, FC, UNAMIR FROM: COL ASRAR, A/CMO, UNOMUR

SUBJ: DAILY SITREP COVERING PERIOD 021000 LT TO 031000 LT MAY 94

MISC 592

I. GENERAL SITUATION: THE UNOMUR OPERATIONAL AREA IS CALM

FC OPS

II. FACTIONAL ACTIVITIES:
A. POLITICAL - NTR
B. MILITARY
1) NRA - NRA IS NOT ALLOWING OUR PATROLS TO REACH MERAMA HILLS DURING THE DAY AND NIGHT. DURING THE DAY THEY ARE ALLOWING OUR PATROL TO GO 5 KM SHORT OF MERAMA HILLS BUT DURING THE NIGHT THEY ARE NOT ALLOWING US TO CROSS KAMWESI AREA. EVEN THE NRA TROOPS ARE SHOWING NON COOPERATION WITH OUR PATROLS. WHEN THE LIAISON OFFICER WAS ASKED THE REASON OF NOT ALLOWING OUR PATROLS TO GO TO MERAMA HILLS AREA HE REPLIED THAT HE HAS NO INSTRUCTIONS REGARDING THIS FROM HIS HQS. THEN HE WAS REQUESTED TO GIVE US IN WRITING THAT WE CAN NOT SEND OUR PATROLS TO THAT AREA BUT HE REFUSED TO GIVE US SO. HE ALSO MENTIONED THAT HE HAS INSTRUCTIONS FROM HIS HQS NOT GIVE US ANYTHING IN WRITING IN THIS REGARD.
2) RPF - NTR
3) OTHERS - NTR

III. OWN MILITARY ACTIVITIES
A. HQS - DCMO VISITED KISORO AND OP24 (SQ 6650) ON 021400 MAY 94
B. AREAS
A) STATIC POST
(1) TEAM DELTA AT KATUNA UPTO 08 MAY 94
(2) TEAM ECHO AT LUBIRIZI AND KASHEKYE UPTO 08 MAY 94
(3) TEAMS FOXTROT AND HOTEL MANNED OP9 (SQ 0747) AND OP14 (SQ 9138) RESPECTIVELY FOR 24 HOURS.

B) PATROLLING
TEAMS FOXTROT AND GOLF CARRIED OUT PATROLLING IN G-1 ZONE. TEAMS INDIA AND FOXTROT CARRIED OUT NIGHT PATROLLING IN E-3 SUB ZONE. TEAMS JULIET AND GOLF CARRIED OUT PATROLLING IN F ZONE.

C) OPERATIONAL ASPECTS - NTR

2) WEST/KISORO
A) STATIC POST
(1) TEAM ALFA AT KYANIKA UPTO 09 MAY 94
(2) TEAM CHARLIE MANNED OP24 (SQ 6650) FOR 24 HOURS.

B) PATROLLING
TEAM ALFA CARRIED OUT PATROLLING FROM KYANIKA TO NKURUNGURU AREA.
TEAM ALFA CARRIED OUT NIGHT PATROLLING ALONG THE ROAD KISORO KYANIKA.
HQS STAFF CARRIED OUT NIGHT PATROLLING FROM KISORO TO NKURUNGURU.

C) OPERATIONAL ASPECTS - NTR

IV. HUMANITARIAN ACTIVITIES - NTR
V. CIVIL AFFAIRS - NTR
VI. LOGISTICS - NTR
VII. MISCELLANEOUS
A. BORDER CROSSINGS:
1) FROM UGANDA TO RWANDA
12 VEHICLES (ALL PICK UPS) CROSSED THE BORDER THROUGH KATUNA WITH SEVENTEEN (17) PASSENGERS. THEY WERE HEADING FOR MULINDI. NOTHING SIGNIFICANT COULD BE FOUND OUT OTHER THAN THE VEHICLES MENTIONED ABOVE TWO (02) PERSONS CROSSED THE BORDER ON FOOT ALSO.

2) FROM RWANDA TO UGANDA
15 VEHICLES (TRUCKS 02, JEEPS/PICK UPS 11, CARS 02 AND MOTOR CYCLE 01) CROSSED THE BORDER THROUGH KATUNA AND KASHAKYE OP WITH SEVENTY FOUR (74) PASSENGERS. NOTHING SIGNIFICANT COULD BE FOUND OUT.

B. OUR PATROL ACTIVITIES WERE NEGATIVELY AFFECTED DUE TO HEAVY RAINFALL.

VIII. BEST REGARDS.

COL CKD
NNNN

IN.055

NYK PLS RELAY TKS

FSTM9096-05

MKF 983

UNAMIR
HEADQUARTERS

United Nations Observer Mission Uganda/Rwanda
La Mission d'observation des Nations Unies Ouganda/Rwanda

OUT GOING FAX NO: 657
02 MAY 1994

TO: MAJ GEN R. A. DALLAIRE FC UNAMIR KIGALI MISC 589	FROM: for COL ASRAR ACTING CMO UNOMUR 02/05/94 KABALE LTC MURROSY DEPO
FAX NO: (07) 84265	FAX NO: 256 486-23816
SUBJECT: WEEKLY SITREP FROM 25 APRIL TO 01 MAY 94	

1. GENERAL SITUATION

THE GENERAL SITUATION IN UNOMUR OPERATIONAL AREA CONTINUES TO BE CALM.THERE IS NO SIGNIFICANT CHANGE.

2. MILITARY

A. DEPLOYMENT

(1) HQ/CP

(A) WEEKLY CONFERENCE WITH THE AREA COMMANDERS AND STAFFS CHAIRED BY ACTING CMO HELD ON 251200APRIL'94. VARIOUS OPERATIONAL AND ADMINISTRATIVE ASPECTS WERE DISCUSSED.

(B) ACTING CMO VISITED KISORO, KYANIKA, OP21 (SQ 7854) AND OP24 (SQ 6650) AND GAVE SOME INSTRUCTIONS REGARDING MODUS OPERANDI.

(C) THE ACTING CMO VISITED LUBIRIZI OP ON 271100APRIL'94. HE

CARRIED OUT AERIAL RECONNAISSANCE OF THE AREA (D). DCMO VISITED OP14 (SQ 9138) ON281100APRIL'94. HE CARIED OUT RECONNAISSANCE OF THE AREA.

(D) THE ACTING CMO LEFT FOR KAMPALA ON 010800MAY'94 TO MEET THE ARMY COMMANDER OF NRA.

(2) OP/CP - NTR

(3) PATROLS

DURING THE PERIOD PATROLLING WERE CARRIED OUT AS FOLLOWS: TOTAL TWENTY ONE (21) MOBILE PATROLS, FIVE (05) FOOT PATROLS, TWENTY EIGHT (28) NIGHT PATROL AND AERIAL PATROL WERE CARRIED OUT.

(4) HELICOPTER MISSIONS (UP TO 26 APR)

(A) HOURS FLOWN - 116.3

(B) TOTAL PASSENGERS - 938

(C) TOTAL LOAD - 2,230Kg

(D) TOTAL AIR MISSIONS - 93

(5) DETAILS OF VEHICLES AND PERSONAL CROSSED THE BORDER:

CPs	NO OF VEHICLES CROSSED THE BORDER		NO OF PEOPLE CROSSED THE BORDER		WITH LOAD(*)
	TO RWANDA	TO UGANDA	TO RWANDA	TO UGANDA	
KATUNA	81 (*) 2 ICRC	105 10 ICRC	339	377	FOOD (*2) FUEL (*1)
KYANIKA	0	0	0	0	
LUBIRIZI/ KASHEKYE	21	18	597	54	
BIGAGA	0	0	0	0	
KAFUNZO	0	0	0	0	

B. PERSONNEL

(1) STRENGTH: 81

(A) AVAILABLE: 80

(B) CASUALTIES: NIL

(2) LEAVE/CTO: 01

(3) MEDICAL SITUATION

ALL OUR MILITARY AND CIVIL PERSONNEL ARE IN GOOD HEALTH.

C. RELATION WITH NRA

RELATIONS WITH NRA IS GOOD EXCEPT IN SOME CASES (REFERENCE TO OUR CODE CABLE OF 01 MAY'94.

3. VIOLATIONS, INCIDENTS AND COMPLAINTS

THE ACTING CMO WENT TO KAMPALA TO MEET THE ARMY COMMANDER WHERE HE WILL RAISE THE ISSUE OF NRA NOT ALLOWING OUR PATROLS TO GO NEAR THE BORDER AROUND MERAMA HILLS.

4. POLITICAL - NTR

5. ADMINISTRATIVE AND LOGISTICAL SUPPORT - NTR

6. LIAISON, CONTACT AND MEDIA - NTR

7. OBSERVATIONS/COMMENTS - NTR

MKF 981

IN.053 Page 1 UTC Time: 94-05-02 08:14:36

UNAMIR
94 MAY -2 08 19

NL BURUM LES 493131318=FQMU X 2-MAY-1994 08:10:41 157278

ZCZC OUT.017

KABALE (UNOMUR) 02 MAY 0749Z

TO: MGEN DALLAIRE, FC, UNAMIR FROM: COL ASRAR, A/CMO, UNOMUR

FC ops

SUBJ: DAILY SITREP COVERING PERIOD 011000 LT TO 021000 LT MAY 94

MISC 588

I. GENERAL SITUATION: THE UNOMUR OPERATIONAL AREA IS CALM.

II. FACTIONAL ACTIVITIES
A. POLITICAL - NTR
B. MILITARY
1) NRA - NRA IS NOT ALLOWING OUR PATROLS TO REACH MERAMA HILLS.
2) RPF - NTR
3) OTHERS - NTR

III. OWN MILITARY ACTIVITIES
A. HQS - NTR
1) EAST/KABALE
A) STATIC POST
(1) TEAM I AT KATUNA UPTO 02 MAY 94
(2) TEAM J AT LUBIRIZI AND KASHEKYE UPTO 01 MAY 94
(3) TEAMS F AND H MANNED OP9 (SQ 0747) AND OP14 (SQ 9138) RESPECTIVLEY FOR 24 HOURS.

B) PATROLLING
PATROL WAS NOT ALLOWED TO GET ON MERAMA HILLS (SQ 5183) BY NRA. TEAM G CARRIED OUT PATROLLING AT LUBIRIZI AND KESHEKYE AREA.

C) OPERATIONAL ASPECTS - NTR

2) WEST/KISORO
A) STATIC POST
(1) TEAM B AT KYANIKA UPTO 02 MAY 94
(2) TEAM C MANNED OP24 (SQ 6650) FOR 24 HOURS

B) PATROLLING
TEAM B CARRIED OUT NIGHT PATROLLING ALONG THE ROAD KYANIKA KISORO. TEAM B CARRIED OUT FOOT PATROLLING FROM KYANIKA TO CHAHAFI. HQ STAFF CARRIED OUT AIR PATROLLING ON ROUTE KISORO, OP21, OP24, KISORO. HQ STAFF CARRIED OUT PATROLLING IN KABINDI, NKURUNGURU, CHAHAFI AND LUGENDABARE AREAS.

C) OPERATIONAL ASPECTS - NTR

IV. HUMANITARIAN ACTIVITIES - NTR

V. CIVIL AFFAIRS - NTR

VI. LOGISTICS - NTR

VII. MISCELLANEOUS
A. BORDER CROSSINGS:
1) ROM UGANDA TO RWANDA- 07 VEHICLES (JEEPS/PICK-UPS 06 AND MICROBUS 01) WITH 20 PASSENGERS CROSSED THE BORDER THROUGH KATUNA OP. NOTHING SIGNIFICANT COULD BE FOUND.
02 VEHICLES (PICK-UP 01 AND TRUCK 01) CROSSED THE BORDER WITH 80 PASSENGERS THROUGH KASHEKYE OP. THEY WERE RETURNING TO RWANDA.

2) FROM RWANDA TO UGANDA - 17 VEHICLES (TRUCKS 03, JEEPS/PICK-UP 10, CARS 03 AND MICROBUS 01) CROSSED THE BORDER THROUGH KATUNA OP WITH 55 PASSENGERS. NOTHING SIGNIFICANT COULD BE FOUND.
01 TRUCK CROSSED THE BORDER THROUGH KASHEKYE OP WITH 04 PASSENGERS. NOTHING SIGNIFICANT COULD BE FOUND.

VIII. BEST REGARDS.

COL CKD
NNNN

IN.053

NYK PLS PROTEC TKS HKF946

United Nations Observer Mission Uganda/Rwanda
La Mission d'observation des Nations Unies Ouganda/Rwanda

UNAMIR 94 APR 30 08 07

OUTGOING FAX NO. 653
30 APRIL 94 PAGE 1 OF 4

TO: MAJ GEN R. A. DALLAIRE FC UNAMIR KIGALI MUC 584	FROM: COL ARRAR ACTING CMO UNOMUR KABALE
FAX NO: (07) 84265	FAX NO: 256 486-23816

SUBJECT: DAILY SITREP COVERING PERIOD 291000 LT APRIL TO 301000 LT APRIL 94

I. GENERAL SITUATION

THE UNOMUR OPERATIONAL AREA IS CALM.

II. FACTIONAL ACTIVITIES

A. POLITICAL - NTR

B. MILITARY

1) NRA - NTR

2) RPF - NTR

3) OTHERS - NTR

III. OWN MILITARY ACTIVITIES

A. HQS DCMO VISITED OP 9(SQ 0747)AND OP21(SQ7854) ON 291100 APRIL'94.

B. AREAS

1) EAST/KABALE

A) STATIC POST

(1) TEAM INDIA AT KATUNA UPTO 01 MAY'94.

(2) TEAM JULIET AT LUBIRIZI-KASHAKYE UPTO 01 MAY'94.

FC OP

(3) TEAM FOXTROT AT OP9(SQ 0747) FOR 24 HOURS.

B) PATROLLING

TEAM ECHO AND GOLF CARRIED OUT PATROLLING AT MERAMA HILLS (SQ 5183). TEAM HOTEL CARRIED OUT RECCE PATROLLING FROM LUBIRIZI UP TO MERAMA HILLS.TEAM INDIA CARRIED OUT DAY AND NIGHT PATROLLING IN RUBAYA AND BIGAGA AREAS.TEAMS ECHO AND GOLF CARRIED OUT NIGHT PATROLLING AT GOLF-1 AREA.

C) OPERATIONAL ASPECTS - NTR

2) WEST/KISORO

A) STATIC POST

(1) TEAM BRAVO AT KYANIKA UP TO 02 MAY 94.

(2) TEAM ALFA MANNED OP 21 (SQ 7854) FOR 24 HOURS.

(3) TEAM C MANNED OP 24 (SQ 6650) FOR 24 HOURS

B) PATROLLING

TEAM BRAVO CARRIED OUT NIGHT PATROLLING FROM KYANIKA ALONG THE ROAD KYANIKA KISORO. HQS STAFF CARRIED OUT PATROLLING FROM KISORO TO CHAHAFFY AREAS.

C) OPERATIONAL ASPECTS - NTR.

IV. HUMANITARIAN ACTIVITIES

A ICRC CONVOY CONSISTING OF FOUR(04) VEHICLE CAME FROM RWANDA ON 291930 APRIL'94.

V. CIVIL AFFAIRS - NTR

VI. LOGISTICS - NTR

VII. MIRCELLANEOUS

A. BORDER CROSSINGS:

1) FROM UGANDA TO RWANDA:

13 VEHICLES (TRUCKS 01, JEEPS/PICK UPS 12) WITH 55 PASSENGERS CROSSED THE BORDER THROUGH KATUNA AND KASHEKYE OP.NOTHING SIGNIFICANT COULD BE FOUND OUT.

109 REFUGEES (MEN 08, WOMEN 34 AND CHILDREN 58) CROSSED THE BORDER BY VEHICLE THROUGH KASHEKYE OP.

2) FROM RWANDA TO UGANDA:

17 VEHICLES (TRUCKS 01, JEEPS/PICK UP 16) CROSSED THE BORDER THROUGH KATUNA AND KASHAKYE WITH 41 PASSENGERS. NOTHING SIGNIFICANT COULD BE FOUND OUT.

VIII. BEST REGARDS.

653 PAGE 4 OF 4

A. DATE OF BORDERCROSSING		29 APRIL'94
B. PLACE OF BORDERCROSSING(GRIDS)		225591
C.NUMBER OF MEN WITH ESTIMATE OF AGE (20 TO 35)		08
D.NUMBER OF WOMEN	34	
E.NUMBER OF CHILDREN	58	
F.NUMBER OF FAMILIES		
G.TOTAL STRENGTH THAT DAY/THAT PLACE		109
H.TOTAL STRENGTH SINCE BEGINING OF THE REPORTING		169
I.WAY OF CROSSING		VEHICLE
J.EQUIPMENT		HOUSE HOLD ITEMS
K.FOOD		NTR
L.FURNITURE		NTR
M.CATTLE OR OTHER ANIMAL		NTR
N.ARMS(?)		NTR
O.ATTITUDE		FRIENDLY
P.MISCELLANEOUS		NTR

UNAMIR
94 APR 26 08 31

UNAMIR FORCE HQ
OUTGOING FACSIMILE

KMF 549

UNAMIR
94 APR 26 10 22

(1)

26 APRIL 1994

TO: COL ASRAR, ACTING CMO UNOMUR KABALE	FROM: COL MOEEN, CHIEF OPERATIONS OFFICER, UNAMIR, KIGALI, RWANDA
FAX: 256-486-23816	FAX: 1-212-963-3090
MISC 410	
SUBJECT: FORCE COMMANDER'S - DECISIONS	
NUMBER OF PAGES, INCLUDING THIS COVER: ONE	

1. REQUEST DISCUSS WITH NRA FOR POSSIBLE ESTABLISHING HUMANITARIAN AFFAIRS CELL (HAC) IN YOUR HQ. UN CIV PERSONNEL WILL BE MANNING THE CELL. YOU ARE TO PROVIDE 2 X UNMOs FOR THE CELL. ALSO PROVIDE INTERNATIONAL TELEPHONE TO HAC.

(2) FC

A. TASKS OF HAC

(1) FACILITATE COMMUNICATION WITH UNAMIR FORCE HQ.

(2) COORDINATE FOOD CONVOY MOVING FROM UGANDA TO RWANDA.

(3) SELECT ROUTES FOR FOOD OR MILITARY CONVOYS.

(4) HAVE COMMUNICATION WITH REST OF THE WORLD FOR HUMANITARIAN AID.

B. LOCATION OF HAC. CO-LOCATED WITH UNOMUR HQ.

2. CARRYOUT DETAIL RECCE OF MIRAMA - KAMPALA ROAD AND SEND REPORTS ASP. REPORT TO INCL ROAD CONDITION, CHOKE PTS, LIKELY HARBOUR AREAS, LOC OF REST AREAS ETC.

3. EXTEND YOUR OPS ALONG THE BORDER COVERING UPTO ZAIRIAN BORDER. OPS MUST BE PURSUIT IN GEN AREA GORILLA PARK AND KINIGI.

4. REGARDS.

FC E/DIR CMO

UNAMIR

94 APR 26 21 02

UNAMIR

94 APR 27 05 42

UNAMIR FORCE HQ
OUTGOING FACSIMILE

MKF 564

26 APRIL 1994

TO: COL ASRAR ACTING CMO UNOMUR, KABALE	FROM: MAJ GEN R A DALLAIRE FC UNAMIR, KIGALI, RWANDA COO For FC
FAX: 256- 486-23816	FAX: (250) 84265
	MISC 425
SUBJECT: HELICOPTER STATE	
NUMBER OF PAGES, INCLUDING THIS COVER: ONE	

1. PLEASE INFORM US IF YOUR HELICOPTERS ARE READY FOR OPERATION AT KIGALI. WE ARE BADLY IN NEED OF THOSE HELICOPTERS. PLEASE ACKNOWLEDGE.

2. REGARDS.

FC E/DIR

UNAMIR

94 APR 25 16 30

UNAMIR

94 APR 25 17 23

OUTGOING FAX KMF 537

NO OF PAGES TRANSMITTED INCL THIS ONE: 01

TO: COL ASRAR ACTING CMO UNOMUR KABALE	FROM: CMO MILOB HQ UNAMIR KIGALI, RWANDA
FAX: 256-486-23816	DATE: 25 APRIL 94
TEL NO :	FAX NO: 07
REF	TEL NO:

MOST URGENT MISC 398

SUBJECT: **MILOBS FROM UNAMIR IN KABALE**

1. PLEASE SEND A LIST OF MILOBS IN KABALE SHOWING NAME, NATIONALITY, UNID NO AND DATE OF ARRIVAL IN UGANDA.

2. REGARDS.

(Fd CMO E/DIR

UNAMIR
94 APR 25 22 02

P 1/3

UNAMIR
94 APR 26 10 22

UNITED NATIONS ASSISTANCE MISSION FOR RWANDA
UNAMIR

(MISSION DES NATIONS UNIES POUR L'ASSISTANCE AU RWANDA)
(MINUAR)

KIGALI RWANDA

OUTGOING FAX NO. KMF 543 PAGE 1 OF 3

TO:AZRAR\UNOMUR\KABALE	FROM:DALLAIRE\UNAMIR\KIGALI
PREFIX/NO: ~~MIR~~/ misc 404	DATE: 25 APRIL 94
ATTN: COL AZRAR	PHONE:3-3092
FAX NO: ~~256-2-22698~~7 256 486 23816	FAX NO: 1-212-963-3090
INFO: FAX NO:	DRAFTED BY: MAJ BEARDSLEY FILE REF:
Internal Dist.	
SUBJECT: KIGALI AIRPORT	
REFERENCE: UNOMUR KMF 857 DATED 25 APRIL 1994	

1. IN RESPONSE TO YOUR FAX IN REFERENCE TO INSURANCE QUESTIONS FOR THE UNOMUR HELICOPTERS TO REDEPLOY TO UNAMIR THE FOLLOWING ANSWERS ARE FORWARDED FOR YOUR INFORMATION:

   A. THE AIRPORT IS UNDER JOINT UNAMIR\RGF CONTROL. UNAMIR IS ATTEMPTING TO NEGOTIATE AN AGREEMENT THAT WOULD SEE THE AIRPORT DECLARED NEUTRAL INTERNATIONAL TERRITORY UNDER SOLE CONTROL AND SECURITY OF UNAMIR. THIS AGREEMENT HAS NOT BEEN FINALIZED.

   B. THE UN STRENGTH AT THE AIRPORT IS 175 ARMED MILITARY PERSONNEL (ONE RIFLE COMPANY AND ONE SERVICE SUPPORT PLATOON) AND MISCELLANEOUS MILITARY OBSERVERS AND STAFF OFFICERS.

   C. THE TROOPS ARE ALL GHANIAN AND THE REST ARE MISCELLANEOUS NATIONALITIES (CANADIAN, SENEGAL ETC).

2. FOR YOUR ACTION. REGARDS.

FC E/DIR CMO

P2/3

KMF857

IN.029 Page 1 UTC Time: 94-04-25 08:57:40

NL BURUM LES 493131318=FOMU X 25-APR-1994 08:53:40 114726

ZCZC OUT.006

KABALE (UNOMUR) 25 APR 0839Z

TO : DALLAIRE, FC

INFO: GOLO, OIC ADM.

FROM: GOERANSSON, SAO

MISC 551

UNAMIR
1994 APR 25 11 57

1. THE INSURANCE COMPANY FOR THE CANADIAN HELICOPTER COMPANY HAS ASKED THE FOLLOWING QUESTIONS ABOUT THE KIGALI AIRPORT:

I. WHO IS IN CONTROL OF THE AIRPORT ?

II. HOW MANY UN TROOPS ARE AT THE AIRPORT ?

III. WHAT NATIONALITIES ?

2. IT WOULD BE APPRECIATED IF YOUR REPLY COULD BE SENT TO UNOMUR KABALE. THE CHIEF PILOT IS IN PHONE CONTACT WITH HIS HQS IN CANADA ON A DAILY BASIS.

3. YOUR REPLY WOULD BE APPRECIATED AS PRESENTLY HELICOPTERS ARE NOT/NOT INSURED IN RWANDA.

REGARDS.

COL CKD
NNNN

FC E/DIR

P 3/3

KMF 858

IN.030 Page 1 UTC Time: 94-04-25 11:44:54

NL BURUM LES 493131318=FOMU X 25-APR-1994 11:40:58 116204

UNAMIR
1994 APR 25 11 57

ZCZC OUT.007

KABALE (UNOMUR) 25 APR 1122Z

TO : DALLAIRE, FC, UNAMIR

FROM: COL ASRAR, A/CMO, UNOMUR

SUBJ: DEPLOYMENT OF HELICOPTERS

MISC 553

1. REFERENCE IS MADE TO MY TELEPHONE CONVERSATION WITH AVIATION OFFICER/UNAMIR OF THIS MORNING, REQUESTING THE DISPATCH OF TWO HELICOPTERS FROM UNOMUR/KABALE TO UNAMIR/KIGALI FOR THREE DAYS.

2. FLIGHT TO BE MADE OVER RWANDA TERRITORY IN GENERAL AND STATIONING OF HELICOPTERS IN KIGALI IN PARTICULAR, ARE DUE TO THE PREVAILING SITUATION SUBJECT OF SPECIAL INSURANCE CONDITIONS, (AS STATED BY THE CHIEF PILOT AS ORDERED BY THE HELICOPTER COMPANY) WHICH ARE NOT APPLICABLE FOR THE HELICOPTERS OPERATING IN THE UNOMUR SECTOR. THEREFORE SPECIAL INSURANCE ARRANGEMENTS HAVE TO BE MADE FOR THE THREE IN KABALE BASED HELICOPTERS IF THEY HAVE TO MOVE TO/FLY OVER RWANDESE TERRITORY. THIS SPECIAL INSURANCE COVER IS BEING PREPARED BY THE CANADIAN HELICOPTER COMPANY.

3. BECAUSE OF THE REQUIREMENTS BY UNAMIR/KIGALI AND THE NEED OF UNOMUR TO CARRY OUT ITS INCREASED DUTIES (EXTENSION OF THE AREA OF RESPONSIBILITY FROM LUBRIZI/KAMWESI INTO NORTH-EASTERN DIRECTION UP TO MERAMA HILLS AND THE INTENSIFIED PATROLLING IN THE PREVIOUS AREA OF RESPONSIBILITY) I WOULD LIKE TO PROPOSE THE FOLLOWING:

A. TO MOVE THE TWO UNAMIR HELICOPTERS, NOW IDLE AT NAIROBI AIRPORT, TO KABALE TO KEEP THESE FOR IMMEDIATE STAND BY FOR UNAMIR/KIGALI ONCE CLEARED BY INSURANCE.

B. TO KEEP KEEP THE THREE HELICOPTERS NOW BASED AT KABALE HELIPAD AVAILABLE TO UNOMUR TO ENABLE UNOMUR TO CARRY OUT ITS INCREASED DUTIES.

BASING OF FIVE HELICOPTERS AT KABALE UNDER OPERATIONAL CONDITIONS DOESNT CAUSE TECHNICAL OR OPERATIONAL PROBLEMS.

4. KINDLY ADVISE.

5. BEST REGARDS.

COL CKD
NNNN

(in) Elnio

NYK PLS RELAY TKS

UNOMUR MONITOR

UNITED NATIONS
CENTRE
HEADQUARTERS

A 6:44

FBM 8546-04

United Nations Observer Mission Uganda/Rwanda
La Mission d'observation des Nations Unies Ouganda/Rwanda

MKF859

OUTGOING FAX NO. 613
25 APRIL 1994

PAGE 1 OF 3

TO:	MGEN DALLAIRE FC UNAMIR KIGALI MISC 553	FROM:	COL ASRAR ACTING CMO UNOMUR KABALE
FAX NO:	(07) 84285	FAX NO:	256 486-23815
SUBJECT:	DAILY SITREP COVERING PERIOD 241000 LT TO 251000 LT APRIL 94		

I. GENERAL SITUATION

THE UNOMUR OPERATIONAL AREA IS CALM.

II. FACTIONAL ACTIVITIES

A. POLITICAL - NTR

B. MILITARY

1) RRA - NTR

2) RPF

IT SEEMS THAT RPF IS MANNING THE AREA OPPOSITE TO MIRAMA HILLS (SQ 5183), WHICH WAS EARLIER IN THE CONTROL OF RGF.

3) OTHERS - NTR

III. OWN MILITARY ACTIVITIES

A. [illegible] - NTR

B. AREAS

UNAMIR
94 APR 25 12 14

FC E'DIR

1) EAST/KABALE

(A) STATIC POST

(1) TEAM HOTEL AT KATUNA UPTO 25 APRIL 1994.

(2) TEAM DELTA AT LUBIRIZI UPTO 25 APRIL 1994

(3) TEAM ECHO AT OP9 (SQ 0747) FOR 24 HOURS.

(4) TEAM GOLF AT OP14 (SQ 9128) FOR 24 HOURS.

(5) TEAM FOXTROT AT OP12 (SQ 9341) FOR 5 HOURS.

(B) PATROLLING

TEAM INDIA CARRIED OUT PATROLLING IN KAFUNZO AREA.

TEAM HOTEL CARRIED OUT PATROLLING IN E-3 SUBZONE. TEAM INDIA CARRIED OUT NIGHT PATROLLING IN E ZONE.

(C) OPERATIONAL ASPECTS

ALL THE PATROLS FOR THE STATIC POSTS WERE DROPPED BY HELICOPTERS.

2) WEST/KISURO

(A) STATIC POST

TEAM CHARLIE AT KYANIKA UPTO 25 APRIL 1994.

TEAM BRAVO AT OP 24 (SQ 6890) FOR 24 HOURS.

TEAM ALPHA AT OP 21 (SQ 7854) FOR 24 HOURS.

(B) PATROLLING TEAM CHARLIE CARRIED OUT PATROLLING ALONG ROAD KYANIKA-NKURUNGURU. TEAM CHARLIE CARRIED OUT NIGHT PATROLLING ALONG ROAD KYANIKA-KISORO.

(C) OPERATIONAL ASPECTS

ALL THE PATROLS FOR OBSERVATION POSTS WERE DROPPED BY HELICOPTERS.

IV. HUMANITARIAN ACTIVITIES - NIL

V. CIVIL AFFAIRS - NIL

VI. LOGISTICS - NIL

VII. MISCELLANEOUS

A. BORDER CROSSINGS

(1) FROM UGANDA TO RWANDA - TOTAL SEVENTEEN (17) VEHICLES [TRUCK (01), JEEPS/PICK-UPS (12) AND MINIBUS (04)] CROSSED THE BORDER WITH FIFTY FIVE (55) PASSENGERS. THEY WERE CARRYING MAIZE, SMALL QUANTITY OF MEDICINE , 6200 LITRES OF PETROL AND ABOUT TEN BALLS OF BLANKETS.

(2) FROM RWANDA TO UGANDA - TOTAL SEVENTEEN (17) VEHICLES [TRUCKS (03), PICK-UPS (11) AND CARS (03)] CROSSED THE BORDER WITH FIFTY EIGHT (58) PASSENGERS.

VIII. BEST REGARDS

UNAMIR
94 APR 25 08 12

(1)

UNAMIR
94 APR 24 21 05

UNAMIR FORCE HQ
OUTGOING FACSIMILE

KMF 523

24 APRIL 1994

TO: COL ASRAR ACTING CMO UNOMUR, KABALE	FROM: MAJ GEN R A DALLAIRE FC UNAMIR, KIGALI, RWANDA for FC
FAX: 256- 486-23816	FAX: (250) 84265
MISC 384	
SUBJECT: ATTACHMENT OF HELICOPTER	
NUMBER OF PAGES, INCLUDING THIS COVER: ONE	

1. PLEASE KEEP 02 X HELICOPTERS STAND BY FROM YOUR UNIT FOR SENDING TO KIGALI ON 25 APR 94 SOME TIMES IN THE AFTERNOON PD THE HELICOPTERS ARE LIKELY TO STAY AT KIGALI FOR THREE DAYS PD FUEL WILL BE ARRANGED BY THE CHIEF LOGISTIC OFFICER OF UNAMIR PD THE HELICOPTERS WILL BE USED BY THE HUMANITARIAN PERSONNEL PD MAINTENANCE CREW ARE TO ACCOMPANY.

2. REGARDS.

(2) FC
Info.
B/G.
maj
A/MA

FC E/DIR

NYK PLS RELAY TKS

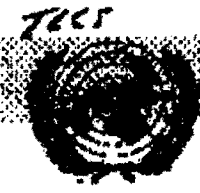

United Nations Observer Mission Uganda/Rwanda
La Mission d'observation des Nations Unies Ouganda/Rwanda

1994 APR 23 07 36
UNAMIR

OUTGOING FAX NO. 603
23 APRIL 94 PAGE 1 OF 3

TO: MAJ GEN R. A. DALLAIRE FC UNAMIR KIGALI MISC 544	FROM: COL ASRAR ACTING CMO UNOMUR KABALE
FAX NO: (07) 84265	FAX NO: 256 486-23816

SUBJECT: DAILY SITREP COVERING PERIOD 221000 LT APRIL TO 231000 LT APRIL 94

I. GENERAL SITUATION

THE UNOMUR OPERATIONAL AREA IS CALM.

II. FACTIONAL ACTIVITIES

A. POLITICAL - NTR

B. MILITARY

1) NRA - NTR

2) RPF - NTR

3) OTHERS - NTR

III. OWN MILITARY ACTIVITIES

A. HQS

(1) THE ACTING CMO ALONG WITH OPERATIONAL STAFFS VISITED KISORO, OP24 (SQ6650) AND OP23 (SQ7351).

B. AREAS

1) EAST/KABALE

A) STATIC POST

(1) TEAM H AT KATUNA UP TO 24 APRIL 94.

1994 APR 23 A 3:42
UNITED NATIONS
COMM CENTRE
HEADQUARTERS

FC

(2) TEAM I AT LUBIRIZI AND KASHEKYE UP TO 23 APRIL 94.

(3) TEAM E AND G MANNED OP9 (SQ 0747) AND OP14 (SQ 9138) RESPECTIVELY FOR 24 HOURS.

B) PATROLLING

TEAM D CARRIED OUT RECCE PATROLLING AT LUBIRIZI AREA, SHORT OF MERAMA HILLS.

C) OPERATIONAL ASPECTS - NTR

2) WESTERSORO

A) STATIC POST

(1) TEAM C AT KYANIKA UP TO 25 APRIL 94.

(2) TEAM A MANNED OP 23 (SQ 7351) FOR 24 HOURS.

(3) TEAM B MANNED OP 24 (SQ 6450) FOR 24 HOURS

B) PATROLLING

TEAM A CARRIED OUT PATROLLING IN CHAHAFI, LUGENDABARE, KABINDI, GISOSI AND NKURUNGURU. TEAM C CARRIED OUT NIGHT PATROLLING ALONG THE ROAD KYANIKA KISORO. TEAM C CARRIED FOOT PATROLLING FROM KYANIKA TO CHAHAFI (BP7).

C) OPERATIONAL ASPECTS - NTR.

IV. HUMANITARIAN ACTIVITIES - NTR

V. CIVIL AFFAIRS - NTR

VI. LOGISTICS - NTR

VII. MISCELLANEOUS

A. BORDER CROSSINGS:

1) FROM UGANDA TO RWANDA:

69 VEHICLES (TRUCKS 01, JEEPS/PICK UPS 03 AND CARS 05) CROSSED THE BORDER THROUGH KATUNA OP WITH 17 PASSENGERS. THEY WERE CARRYING 2,000 L OF PETROL.

69 REFUGEES CROSSED THE BORDER IN MBALE BORDER POST (SQ 2299).

2) FROM RWANDA TO UGANDA:

09 VEHICLES (TRUCKS 03, JEEPS/PICK UPS 03 AND CARS 03) WITH 25 PASSENGERS CROSSED THE BORDER THROUGH KATUNA OP.

NOTHING SIGNIFICANT COULD BE FOUND.

B. FOLLOWING MILOBS FROM UNAMIR CROSSED THE BORDER ON 22APRIL'94.

CPT WEISSENBOCK, ERICH (AUSTRIA)

CPT BOUYLA, STEPHANE (CONGO)

SQN LDR ADELAKUN MICHAEL ADEGOKE (NIGERIA)

LTCDR SH USMATN (NIGERIA)

CPT MARTINS ERIC ODIOR (NIGERIA)

MAJ LINARES EDSON (URUGUAY)

CPT BERTERRECHE, CESAR (URUGUAY)

VHL BEST REGARDS.

p 1/7

UNAMIR

94 APR 23 13 33

UNITED NATIONS ASSISTANCE MISSION FOR RWANDA

UNAMIR

(MISSION DES NATIONS UNIES POUR L'ASSISTANCE AU RWANDA)
(MINUAR)

KIGALI RWANDA

OUTGOING FAX NO. KMF 501 PAGE 1 OF 7

TO: COL ASRAR UNOMUR	FROM: MGEN DALLAIRE UNAMIR
PREFIX/NO:	DATE: 23 APR 94
ATTN:	PHONE:
FAX NO: 256 486 23816	FAX NO:
INFO: FAX NO: MISC 362	DRAFTER: BUSSIERE CMPO FILE REF:
Internal Dist.: OIC ADMIN, CFO	
SUBJECT: TEMPORARY REPLACEMENT - MO	
REFERENCE: YOUR CABLE OF 200535Z APR 94	

1. MAJ RANJIT KIMAR MISTRY IS TO GO BACK DIRECT TO BANGLADESH. REQUEST YOU MAKE NECESSARY ARRANGEMENTS FROM UNOMUR. HIS COLLEAGUES ARE IN PROCESS OF BEING REPATRIATED.

2. HIS PERSONAL EFFECTS ARE BEING LOOKED AFTER BY THE MEDICAL PLATOON. REGARDS.

NTF

UNAMIR
94 APR 23 14 13

FC

NYK PLS RELAY TICS

UNAMIR

'94 APR 22 08 31

MKF826

1994 APR 22 A 4:

United Nations Observer Mission Uganda/Rwanda
La Mission d'observation des Nations Unies Ouganda/Rwanda

OUTGOING FAX NO. 598
22 APRIL 94 PAGE 1 OF 3

TO: MAJ GEN R. A. DALLAIRE FC UNAMIR KIGALI MISC 542	FROM: COL ASKAR ACTING CMO UNOMUR KABALE
FAX NO: (07) 84265	FAX NO: 256-486-23816

SUBJECT: DAILY SITREP COVERING PERIOD 211000 LT APRIL TO 221000 LT APRIL 94

1994 APR 22 A 4: 34

I. GENERAL SITUATION

THE UNOMUR OPERATIONAL AREA IS CALM.

II. FACTIONAL ACTIVITIES

A. POLITICAL - NTR

B. MILITARY

1) NRA NRA DEPLOYED ALONG THE BORDER AND IMPROVING THEIR POSITIONS. THEY HAVE ALSO VACATED THEIR CAMP AT LUBERIZI ON 21 APRIL '94. WHEN THEY WERE ASKED ABOUT THE REASON OF VACATING THEIR CAMP THEY REPLIED THAT THEY WERE GOING BACK TO THEIR HQS.IT IS POSSIBLE THAT NRA IS LIKELY TO REDEPLOY TO NEW POSITIONS TO THE NORTH-EAST. WE ARE TAKING STEPS TO OBTAIN MORE INFORMATION ON THIS.

2) RPF - NTR

3) OTHERS - NTR

III. OWN MILITARY ACTIVITIES

A. HQS - NTR.

FC OPS

B. AREAS

1) EAST/KABALE

A) STATIC POST -(1) TEAM H AT KATUNA UP TO 24 APRIL 94.
(2)TEAM J AT LUBIRIRI UPTO 22 APRIL'94.
(3)TEAM E AT OP9(SQ 0747)FOR 24 HRS.
(4)TEAM G AT OP14(SQ9138) FOR 24 HRS.
(5)TEAM D MANNED OP 7(SQ1240) FOR 5 HRS.
(6) TEAM F MANNED OP12(SQ9841) FOR 5 HRS.

B) PATROLLING TEAM D CARRIED OUT PATROLLING IN E-3 SUBZONE.

C) OPERATIONAL ASPECTS - NTR

2) WEST/KISORO

A) STATIC POST -(1) TEAM C AT KYANIKA UP TO 25 APRIL 94.
(2)TEAM B AT OP 23(SQ 7351) FOR 24 HRS.
(3) TEAM A AT OP 24 (SQ6650) FOR 24 HRS.

B) PATROLLING - TEAM C CARRIED OUT NIGHT PATROLLING ON ROAD KYANIKA-KISORO, TEAM C CARRIED OUT FOOT PATROLLING FROM KYANIKA TO BP-07

C) OPERATIONAL ASPECTS - NTR.

IV. HUMANITARIAN ACTIVITIES - NTR

V. CIVIL AFFAIRS - NTR

VI. LOGISTICS -NTR

VII. MISCELLANEOUS

A. BORDER CROSSINGS:

1) FROM UGANDA TO RWANDA:

TWELVE(12) VEHICLES (JEEPS/PICK UPS 10,CAR 01 AND MINI BUS-01) WITH THIRTY SIX(36) PASSENGERS CROSSED THE BORDER THROUGH KATUNA OP.

2) FROM RWANDA TO UGANDA:

THIRTEEN(13) VEHICLES (TRUCK-02,JEEPS/PICK UPS-09,CARS-01 AND MINIBUS-01) CROSSED THE BORDER WITH THIRTY(30) PASSENGERS.

NYK PLS RELAY TKS FSM8269-04

MKF 820

UNAMIR
94 APR 21 09 53

1994 APR 21 A 5:23

United Nations Observer Mission Uganda-Rwanda
La Mission d'observation des Nations Unies Ouganda/Rwanda

OUTGOING FAX NO. 593
21 APRIL 94 PAGE 1 OF 3

TO: MAJ GEN R. A. DALLAIRE FC UNAMIR KIGALI MISC 593	FROM: COL ABRAR ACTING CMO UNOMUR KABALE
FAX NO: (07) 84265	FAX NO: 256 486-23816

SUBJECT: DAILY SITREP COVERING PERIOD 201000 LT APRIL TO 211000 LT APRIL 94

I. GENERAL SITUATION

THE UNOMUR OPERATIONAL AREA IS CALM.

II. FACTIONAL ACTIVITIES

A. POLITICAL - NTR

B. MILITARY

1) NRA

ALL NRA TROOPS IN KYANIKA ARE DIGGING TRENCHES ALONG THE BORDER WITH THE HELP OF CIVILIAN PEOPLE. AROUND 50 YOUNG BOYS AGED BETWEEN 15 TO 20 YEARS ARE GIVEN MILITARY TRAINING AT 25 NRA BATTALION (KISORO).

2) RPF - NTR

3) OTHERS - NTR

III. OWN MILITARY ACTIVITIES

A. HQS

(1) A PATROL FROM MISSION HQS CARRIED OUT AIR PATROL AROUND MIRAMA HILLS (SQ 5183) TO VERIFY THE CROSSING POINTS. THE

FC OPS

BRIDGE ON THE ROAD MIRAMA HILLS - KIGALI, WHICH WAS CLOSED BY RGF, IS OPEN NOW AND THE
GUARDS AT THE RWANDESE SIDE OF THE BORDER SEEM TO BE RPF SOLDIERS.

(2) THE ACTING CMO ALONG WITH OPERATIONAL STAFFS VISITED LUBIRIZI, KASHEKYE, OP9 (SQ 0747), KATUNA, OP 14 (SQ 9138). HE ALSO CARRIED OUT AN AERIAL RECONNAISSANCE OF AOR.

B. AREAS

1) EAST/KABALE

A) STATIC POST

(1) TEAM H AT KATUNA UP TO 24 APRIL 94.

(2) TEAM I AT LUBIRIZI AND KASHEKYE UP TO 21 APRIL 94.

(3) TEAM E AND G MANNED OP9 (SQ 0747) AND OP14 (SQ 9138) RESPECTIVELY FOR 24 HOURS.

B) PATROLLING

TEAM D CARRIED OUT PATROLLING AT RUBAYA AND BIGAGA AREAS. TEAMS D AND F MANNED TEMPORARY OBSERVATION POST NO. 2 (SQ 1859) AND NO. 5 (SQ 1652) RESPECTIVELY FOR 5 HOURS.

C) OPERATIONAL ASPECTS - NIR

2) WEST/KISORO

A) STATIC POST

(1) TEAM C AT KYANIKA UP TO 25 APRIL 94.

(2) TEAM A MANNED OP 23 (SQ 7351) FOR 24 HOURS.

(3) TEAM B MANNED OP 24 (SQ 6650) FOR 24 HOURS

B) PATROLLING

TEAM C CARRIED OUT PATROLLING FROM KYANIKA TO NKURUNGURU. TEAM C CARRIED OUT NIGHT PATROLLING ALONG THE ROAD KYANIKA KISORO.

C) OPERATIONAL ASPECTS - NTR.

IV. HUMANITARIAN ACTIVITIES - NTR

V. CIVIL AFFAIRS - NTR

VI. LOGISTICS - NTR

VII. MISCELLANEOUS

A. BORDER CROSSINGS:

1) FROM UGANDA TO RWANDA:

13 VEHICLES (TRUCKS 02, JEEPS/PICK UPS 07, CARS 03 AND MINIBUS 01) CROSSED THE BORDER THROUGH KATUNA OP WITH 28 PASSENGERS. THEY WERE CARRYING 4,200 L OF PETROL.

01 PICK UP CROSSED THE BORDER THROUGH KASHEKYE WITH 18 PASSENGERS.

2) FROM RWANDA TO UGANDA:

05 VEHICLES (TRUCKS 02 AND JEEPS/PICK UPS 03) WITH 74 PASSENGERS CROSSED THE BORDER THROUGH KATUNA OP. THERE WERE 60 MEN WITHOUT LUGGAGE AND THEY WERE VERY CO-OPERATIVE.

B. FOLLOWING MILOBS FROM UNAMIR CROSSED THE BORDER ON 201500APRIL'94. ALL OF THEM FROM BANGLADESH.

MAJ HOSSAIN, MOBARAK ID 569

MAJ MAHBUBUL HAQUE, MOHAMMAD ID 744

MAJ FARID, AHMED, SHAMSUL ID 741

MAJ AREFIN AHMED, SHAMSUL ID 741

MAJ ARIF, UZ-ZAMAN ID 743

MAJ ISLAM, AHAMUDUL ID 745

VIII. BEST REGARDS.

NYK PLS PROTECT TKS

UNOMUR

United Nations Observer Mission Uganda/Rwanda
La Mission d'observation des Nations Unies

MKF807

OUTGOING FAX NO.: 574

PAGE 1 OF 4

18 APRIL 1994

FSM 7975-04

TO: MGEN A. DALLAIRE FORCE COMMANDER UNAMIR KIGALI MISC 522	FROM: COL AMRAR ACTING CMO UNOMUR KAMALE
FAX NO: (07) 94285	FAX NO: 256 496-23816

SUBJECT: SITUATION REPORT FROM 11 APRIL TO 18 APRIL 1994

1. GENERAL SITUATION AND HIGHLIGHTS

THE GENERAL SITUATION IN UNOMUR OPERATIONAL AREA CONTINUES TO BE CALM. THERE IS NO SIGNIFICANT CHANGE.

2. MILITARY

(A) DEPLOYMENT

(1) HQ/CP

(A) ACTING CMO VISITED KATUNA, LUBIRIZI, KYANIKA OBSERVATION POSTS, THE AREA HQS AND GAVE OPERATIONAL DIRECTIVES.

(B) WEEKLY CONFERENCE WITH THE AREA COMMANDERS AND STAFF CHAIRED BY ACTING CMO TOOK PLACE ON 131100 APRIL 1994. PREVAILING SITUATION AND

FC

CDS

PRESENT MODUS OPERANDI WERE DISCUSSED IN THE MEETING.

(C) ACTING CMO AND HQ STAFFCARRIED OUT AERIAL RECONNAISSANCE OF THE AOR.

(2) OP/CP

WE HAVE STARTED MANNING LUBIRIZI OBSERVATION POST. BESIDES WE ARE ALSO MANNING TWO MORE TEMPORARY OBSERVATION POSTS ON 24 HOURS BASIS.

(3) PATROLS

DURING THE PERIOD TOTAL 25 MOBILE PATROLS, 06 FOOT PATROLS, 18 NIGHT PATROLS AND 55 AERIAL PATROLS WERE CARRIED OUT. APART FROM THESE PATROLS WE ARE MANNING 03 TEMPORARY STATIC POSTS FOR 06 TO 08 HOURS BASIS DAILY.

(4) DETAILS OF VEHICLES AND PERSONNEL CROSSED THE BORDER

OPS	NO OF VEHICLES CROSSED THE BORDER		NO OF PEOPLE CROSSED THE BORDER		WITH LOAD
	TO RWANDA	TO UGANDA	TO RWANDA	TO UGANDA	
KATUNA	48	58	153	105	BEANS AND MAIZE
KYANIKA	01	-	5	-	

(5) PERSONNEL

(1) STRENGTH

TOTAL 90.

(A) AVAILABLE

88.

(B) CASUALTIES

NIL.

(2) LEAVE/CTO

12.

(3) MEDICAL SITUATION

ALL OUR MILITARY AND CIVIL PERSONNEL ARE IN GOOD HEALTH.

(C) RELATIONS WITH NRA

NTR

3. VIOLATIONS, INCIDENTS AND COMPLAINTS

NTR

4. POLITICAL

NTR

5. ADMINISTRATIVE AND LOGISTICAL SUPPORT

(A) WE HAVE RECEIVED TWO VEHICLES (UNOMUR-1, TOYOTA CRESSIDA AND UNOMUR-8 TOYOTA 4 RUNNER) ON 15 APRIL 1994.

(B) ADDITIONAL VEHICLES COULD NOT BE SENT TO TEAMS DUE TO LACK OF SPARE WHEELS, ESSENTIAL TOOLS ETC.

6. LIAISON, CONTACTS AND MEDIA

NTR.

7. OBSERVATIONS/COMMENTS

WE HAVE BEEN ABLE TO MAXIMIZE OUR PATROL AND SURVEILLANCE CAPABILITIES DUE TO:

(1) AVAILABILITY OF 3XHELICOPTERS.
(2) MANNING OF 5 CHECK POSTS ON 24 HOUR BASIS AS AGAINST 2 PREVIOUSLY.
(3) MANNING EVERY DAY AT LEAST 3 TO 4 TEMPORARY CHECKPOSTS POSITIONED ON HIGH/DOMINATING FEATURES AT LEAST FOR 6/8 HOURS.
(4) EXTENSIVE AERIAL SURVEILLANCE OF THE ENTIRE AOR EVERY DAY.

8. BEST REGARDS.

United Nations Observer Mission Uganda/Rwanda
La Mission d'observation des Nations Unies Ouganda/Rwanda

MKE 476

OUTGOING FAX NO. 506
07 APRIL 1994 **PAGE 1 OF 3**

TO: MGEN R. DALLAIRE FC UNAMIR KIGALI MUSC 463	**FROM:** LTC NOORDSY ACTING CMO UNOMUR KARALE
FAX NO: (07) 84265	**FAX NO:** 256 486-23816

SUBJECT: DAILY SITREP COVERING PERIOD 061000 LT TO 071000 LT APRIL 94

GENERAL SITUATION

I. THE UNOMUR OPERATIONAL AREA IS CALM.

II. **FACTIONAL ACTIVITIES**

A. **POLITICAL** - NTR

B. **MILITARY**

1) NRA - NTR

2) RPF - NTR

3) OTHERS - NTR

III. **OWN MILITARY ACTIVITIES**

A. **HQS**

NTR

B. **AREAS**

VI. LOGISTICS

ONE OF OUR VEHICLES (UNOMUR-35) STUCK UP AT LUBIRIZI AREA ON 070100 APRIL 1994 DUE TO LEAKAGE IN THE FUEL TANK CAUSED BY STONE. IT COULD NOT BE EVACUATED BECAUSE OF NON AVAILABILITY OF APPROPRIATE TOW CHAIN.

VIII. MISCELLANEOUS

A. BORDER CROSSINGS

(1) FROM UGANDA TO RWANDA - TOTAL FIVE (05) VEHICLES [TRUCK (01), JEEPS/PICK-UPS (03) AND CAR (01)] CROSSED THE BORDER THROUGH KATUNA WITH THIRTEEN (13) PASSENGERS. NOTHING SIGNIFICANT COULD BE FOUND OUT.

(2) FROM RWANDA TO UGANDA - TOTAL SIX (06) VEHICLES [TRUCKS (03), JEEP/PICK-UP (01) AND CARS (02)] CROSSED THE BORDER WITH TWENTY-SIX (26) PASSENGERS. NOTHING SIGNIFICANT COULD BE FOUND OUT.

B. ON 061100 APRIL 1994 ONE OF OUR PATROL CAME IN CONTACT WITH THE LOCAL RPF CAMP COMMANDER OF KAFUNZO AREA. THE RPF COMMANDER IDENTIFIED HIMSELF AS PATRIC. HE INFORMED THAT MOST OF THE RPF MEMBERS ARE NOT AWARE OF THE PRESENCE OF HELICOPTER IN UNOMUR. SO IT WILL BE BETTER IF THE RPF HQ IS INFORMED ABOUT THIS.

C. THE HELICOPTERS WHICH WE HAVE AT PRESENT DO NOT HAVE ANY UN INSIGNIA AT THE BOTTOM, AS A RESULT IT IS VERY DIFFICULT FOR PEOPLE TO IDENTIFY THE HELICOPTERS OTHER THAN THE COLOUR FROM THE GROUND, SO IT WILL BE SAFE TO HAVE UN MARKED AT THE BOTTOM OF ALL THE HELICOPTERS.

VIII. BEST REGARDS

MKF768

UNAMIR

UNOMUR MONUOR

27

United Nations Observer Mission Uganda/Rwanda
La Mission d'observation des Nations Unies Ouganda/Rwanda

OUTGOING FAX NO. 504
06 APRIL 1994 **PAGE 1 OF 3**

TO: MGEN R. DALLAIRE FC UNAMIR KIGALI MISC 460	**FROM:** LTC NOORDSY 06/04/94 ACTING CMO #283 UNOMUR KABALE
FAX NO: (07) 84265	**FAX NO:** 256 486-23816

SUBJECT: DAILY SITREP COVERING PERIOD 051000 LT TO 061000 LT APRIL 94

GENERAL SITUATION

I. THE UNOMUR OPERATIONAL AREA IS CALM.

II. FACTIONAL ACTIVITIES

A. POLITICAL - NTR

B. MILITARY

1) NRA - NTR

2) RPF - NTR

3) OTHERS - NTR

III. OWN MILITARY ACTIVITIES

A. HQS

WEEKLY MEETING WITH AREA COMMANDERS AND HQ STAFF CHAIRED BY ACTING CMO TOOK PLACE ON 051415 APRIL 94. VARIOUS OPERATIONAL AND ADMINISTRATIVE ASPECTS WERE DISCUSSED.

B. AREAS

FC OPS

1) **EAST/KABALE**

(A) **STATIC POST** TEAM G AT KATUNA UPTO 18 APRIL 1994.

(B) **PATROLLING** TEAMS D AND J CARRIED OUT PATROLLING IN LUBIRIZI AND KASHEKYE AREAS. TEAMS H AND I CARRIED OUT NIGHT PATROLLING IN LUBIRIZI AND KASHEKYE AREAS.

(C) **OPERATIONAL ASPECTS** - NTR

2) **WEST/KISORO**

(A) **STATIC POST** TEAM A AT KYANIKA UPTO 11 APRIL 1994.

(B) **PATROLLING** TEAM C CARRIED OUT PATROLLING IN KABINDI, NKURUNGURU, CHAHAFFY AND LUGENDABARE AREAS. TEAM C CARRIED OUT NIGHT PATROLLING IN CHAHAFFY AND LUGENDABARE AREAS. TEAM A CARRIED OUT PATROLLING IN NKURUNGURU AREA.

(C) **OPERATIONAL ASPECTS** NTR

IV. **HUMANITARIAN ACTIVITIES** - NTR

V. **CIVIL AFFAIRS** - NTR

VI. LOGISTICS

OUT OF ELEVEN (11) VEHICLES, WHICH CAME FROM UNOSOM, WE HAVE RECEIVED TWO (02) VEHICLES ONLY. WE HAVE NOT YET RECEIVED THE OTHER NINE (09) VEHICLES.

VIII. MISCELLANEOUS

A. BORDER CROSSINGS

(1) FROM UGANDA TO RWANDA - TOTAL FIVE (05) VEHICLES [TRUCKS (03) AND JEEPS/PICK-UPS (02)] CROSSED THE BORDER THROUGH KATUNA WITH ELEVEN (11) PASSENGERS. NOTHING SIGNIFICANT COULD BE FOUND OUT.

(2) FROM RWANDA TO UGANDA - TOTAL SIX (06) VEHICLES CROSSED THE BORDER WITH FIFTY SIX (56) PASSENGERS. NOTHING SIGNIFICANT COULD BE FOUND OUT.

B. THE TRUCK (UPL-536) WHICH CROSSED THE BORDER ON NIGHT 4/5 APRIL 1994 LOADED WITH BEANS (REFERENCE TO OUR SITREP OF 5 APRIL 1994) CROSSED THE BORDER AGAIN ON 051430 APRIL 1994 WITH 10 TONS OF BEANS AND WENT TO RWANDA. PROBABLY FOR RPF. IT SEEMS THAT RPF IS USING THE TRUCK FOR TRANSPORTING THEIR FOOD STUFFS.

VIII. BEST REGARDS

1) **EAST/KABALE**

(A) **STATIC POST** TEAM G AT KATUNA UPTO 18 APRIL 1994.

(B) **PATROLLING** TEAMS F AND H CARRIED OUT PATROLLING AT F ZONE AREA. TEAMS I AND J CARRIED OUT PATROLLING IN LUBIRIZI AND KASHEKYE AREAS. TEAMS I AND J CARRIED OUT PATROLLING AT F ZONE AREA. TEAM E CARRIED OUT PATROLLING AT E-2 SUBZONE.

(C) **OPERATIONAL ASPECTS** - NTR

2) **WEST/KISORO**

(A) **STATIC POST** TEAM A AT KYANIKA UPTO 11 APRIL 1994.

(B) **PATROLLING** TEAM B CARRIED OUT PATROLLING IN KABINDI, NKURUNGURU, LAKE CHAHAFFY AND LUGENDARARE AREAS. TEAM C CARRIED OUT NIGHT PATROLLING IN LUGENDARARE AND NKURUNGURU AREAS. TEAM A CARRIED OUT FOOT PATROL FROM KYANIKA TO BP7.

(C) **OPERATIONAL ASPECTS** NTR

IV. **HUMANITARIAN ACTIVITIES** - NTR

V. **CIVIL AFFAIRS** - NTR

UNITED NATIONS
ASSISTANCE MISSION FOR RWANDA

NATIONS UNIES
MISSION POUR L'ASSISTANCE AU RWANDA

UNAMIR - MINUAR

Kigali, 17 February 1994

Dear Colonel,

I should like to thank you most sincerely for the photographs, taken during the visit of your Chief of Staff of the Army, which you were good enough to give to me before your departure to Kabale.

Let me take this opportunity to tell you how much I appreciated your seriousness and sense of responsibility in the discharge of your duties as Chief of Staff and Chief Operations Officer in the Force Headquarters. I have no doubt that in your new assignment as Acting Chief Military Observer of UNOMUR, you will continue to give evidence of competence and ability to adapt yourself to demanding circumstances.

Yours sincerely,

Roméo A. Dallaire
Brigadier-General
Force Commander

Colonel Asrar
Acting Chief Military Observer
UNOMUR
Kabale
Uganda

UNOMUR MONUOR

United Nations Observer Mission Uganda/Rwanda
La Mission d'observation des Nations Unies Ouganda/Rwanda

13452
28 JAN 1994

F/OUT 140
MKF 158
MISC 127

28 JANUARY 1994

TO: DALLAIRE, FC
UNAMIR

FM: MATIWAZA, A/CMO
UNOMUR

SUBJ: APPOINTMENTS FOR FC WITH UGANDAN GOVERNMENT OFFICIALS

1. FIND ATTTACHED A FAX FROM MAJOR HASSAN WHICH IS SELF-EXPLANATORY.

2. IT IS BAD AND SURPRISING THAT THE GOVERNMENT OFFICIALS ARE NOT PREPARED TO COOPERATE.

3. ARRANGEMENTS TO RECEIVE THE FC ON SUNDAY ALREADY TAKEN CARE OF IN KAMPALA BUT CONTENTS OF THE ATTACHED FAX A BIG BLOW.

4. REGARDS.

(2) DFC
I am cancelling until the SRSG is in place. Please speak
RC 28/1

FC SRSG

(3) Noted
28/1 DFC

By MA
Received 281745.
28/1

RECEIVED
OFFICE OF FC
Date 29/1/94
No. 538 By J.A.

140 2/2

~~FIN 109~~

UNOMUR MONUOR

United Nations Observer Mission Uganda/Rwanda
La Mission d'observation des Nations Unies Ouganda/Rwanda

OUTGOING FAX NO: 2
28 JANUARY 1994

TO: COL BEN MATIWAZA A/CMO, UNOMUR KABALE	FROM: MAJOR HASAN MAHMUD MWLO, KAMPALA
FAX NO: 256 486-23816	FAX NO: 041-244801
SUBJECT: OFFICIAL VISIT TO UGANDA BY FC	
NUMBER OF PAGES, INCLUDING THIS PAGE: 1	

1. CHIEF LIAISON OFFICER MAJ. ZAKYE HAS FAILED TO MAKE ANY APPOINTMENTS WITH MINISTER AND ARMY COMMANDER.
2. DEFENCE MINISTER IS AWAY FROM KAMPALA . EXPECTED DATE OF HIS ARRIVAL IS 30 JANUARY 1994.
3. THIS IS FOR YOUR INFORMATION THAT THERE WILL BE NO REPRESENTATIVE FROM NRA OR UGANDA GOVERNMENT SIDE AT THE AIRPORT TO RECEIVE THE FC.
4. THANK YOU AND REGARDS

CMO ; CMPO

TOR 2013152

MKF 106

UNOMUR MONUOR

United Nations Observer Mission Uganda/Rwanda
La Mission d'observation des Nations Unies Ouganda/Rwanda

OUTGOING FAX NO: 85
20 JANUARY 1994

TO: MAJOR HASAN, UNDP KAMPALA	FROM: MATIWAZA A/CMO, UNOMUR KABALE
FAX NO: 041-244801	FAX NO: 256 486-23816
INFO: BGEN DALLAIRE FC, UNAMIR FAX NO. 07-84265	
ATTENTION: MAJ. ZAKYE, CLO NRA, KAMPALA	
SUBJECT: OFFICIAL VISIT TO UGANDA BY FC	

MISC 77

1. CONFIRMATION OF THE FORCE COMMANDER'S APPOINTMENTS WITH TOP GOVERNMENT AND MILITARY OFFICIALS AS STATED IN OUR PREVIOUS FAX DATED 15 JANUARY 1994, IS STILL AWAITED.

2. FC IS EXPECTED TO ARRIVE AT ENTEBBE AIRPORT FOR THE ABOVE APPOINTMENTS ON THE 25 JANUARY 1994.

3. PLEASE ENSURE THAT ALL THE NECESSARY ARRANGEMENTS AND PROTOCOL PROCEDURES BEFITTING THE SENIOR OFFICER ARE MET.

4. REGARDS.

483 Rec'd 21/1/94

FC

TO: FC

FROM: ADC

I made sure that Maj Hason at UNDP Kampala is aware of the urgency of the matter. Appointment to be made from tuesday 25th jan as of 12^00 or wednesday all day.

TOR 2012002

MKF 104

UNOMUR MONUOR

United Nations Observer Mission Uganda/Rwanda
La Mission d'observation des Nations Unies Ouganda/Rwanda

OUTGOING FAX NO. 83
20 JANUARY 1994

TO: DALLAIRE, FC UNAMIR KIGALI	FROM: MATIWAZA A/CMO, UNOMUR KABALE
FAX NO: (07) 84265	FAX NO 256 486-23816
SUBJECT: INFORMATION REQUIRED FOR FC MEETING IN KAMPALA	

MISC 75

REFERENCE: UNAMIR FAX KMF 46

1. PLEASE FIND ATTACHED TO THIS FAX INFORMATION ON THE ORGANIZATION OF UNOMUR, TRANSPORT STATE, COMMUNICATIONS STATE, DEPLOYMENT MAP AND NRA LIAISON ORGANIGRAM.

2. AS PER YOUR REQUEST INFORMATION ON THE ORGANIZATION OF THE NRA SUPPORT TO UNOMUR IS INCLUDED.

3. SUBSTANTIAL PROGRESS HAS BEEN MADE ON THE REORGANIZATION OF SECTOR EAST AND THE SUBSEQUENT FORMATION OF THE 10TH TEAM. A DRAFT IS NOW COMPLETE AND WILL BE SENT TO YOU.

4. REGARDS.

FC

69 Rec'd

TEAMS

(Bang)
(Braz)
(Braz)
ang)
(Bots)

	COUNTRY	REMARKS
Z	HUNGARY	
	BANGLADESH	
	BOTSWANA	
	NETHERLANDS	
	SENEGAL	
	BANGLADESH	
	BANGLADESH	
	NETHERLANDS	
	BANGLADESH	
	HUNGARY	
	BRAZIL	
	ZIMBABWE	
	BOTSWANA	
	SENEGAL	
	NETHERLANDS	
	ZIMBABWE	
	SLOVAKIA	
	BANGLADESH	

UNOMUR **MONUOR**

United Nations Observer Mission Uganda/Rwanda
La Mission d'observation des Nations Unies Ouganda/Rwanda

UNOMUR STAFFING

As 17 January 1994

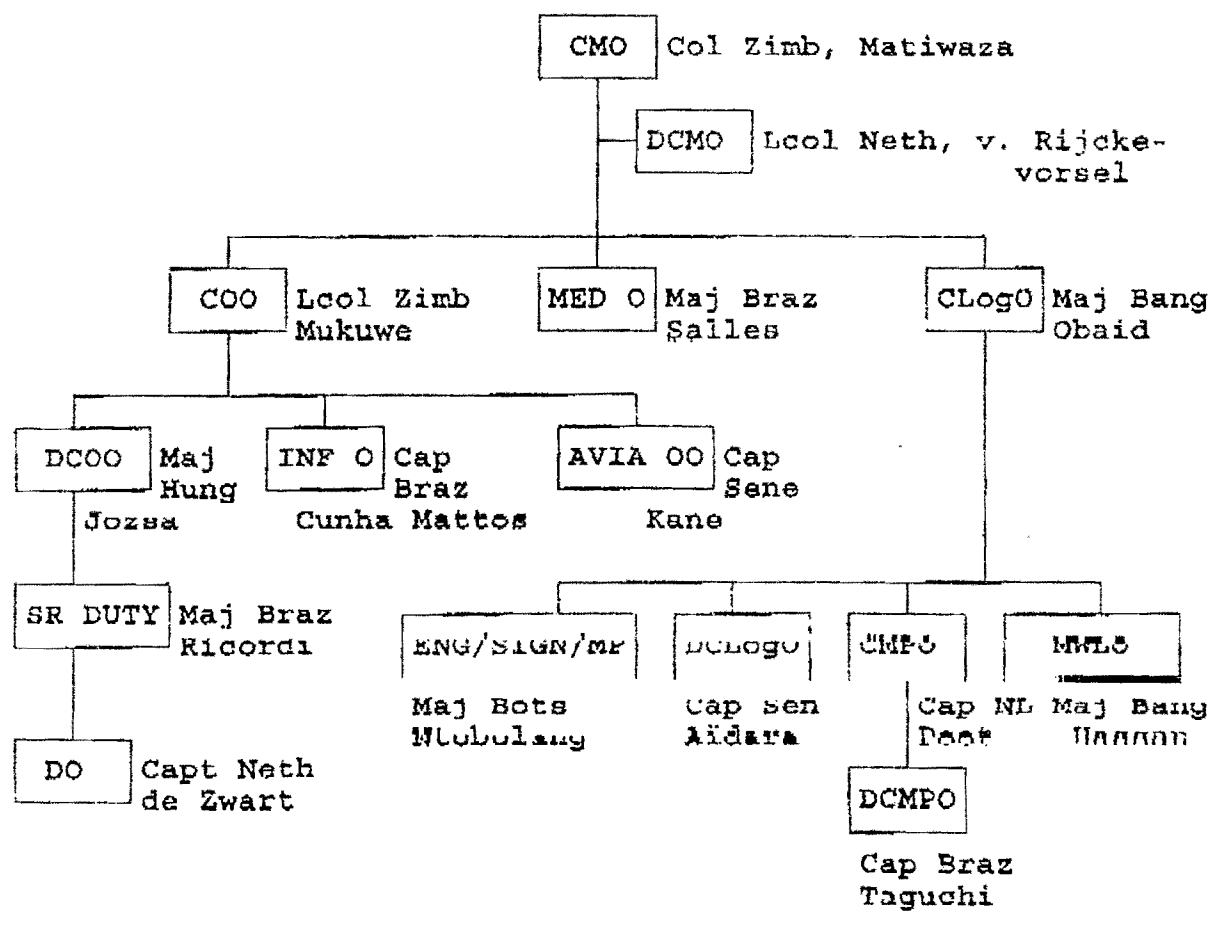

UNOMUR KABALE UGANDA

AREA WES

Commander area west: Maj Shahid
Second in command : Cap Correia
Medical assistant : Sgt Eatevam
Duty officer : Maj Saif (B
Duty officer : Cap Ntbokgo

TEAM	POSITION	RANK	NAME
A	TEAM LEADER	MAJ	LABBANC
	TEAM 2IC	MAJ	AKBAR
	TEAM 3IC	CAP	LEBOTSE
	TEAM UNMO	CWO	TONKES
	TEAM UNMO	CAP	LÔ
	TEAM UNMO	MAJ	NASIR
B	TEAM LEADER	MAJ	MONZUR
	TEAM 2IC	CWO	AERTS
	TEAM 3IC	MAJ	SAJED
	TEAM UNMO	MAJ	KANTOR
	TEAM UNMO	CAP	JORGE
	TEAM UNMO	CAP	DLODLO
C	TEAM LEADER	CAP	MOLEFI
	TEAM 2IC	CAP	N'DIONC
	TEAM 3IC	CWO	WEVER
	TEAM UNMO	MAJ	MAGADZE
	TEAM UNMO	MAJ	KUCERKA
	TEAM UNMO	MAJ	SOHEL

UNOMUR - AREA WEST HQ

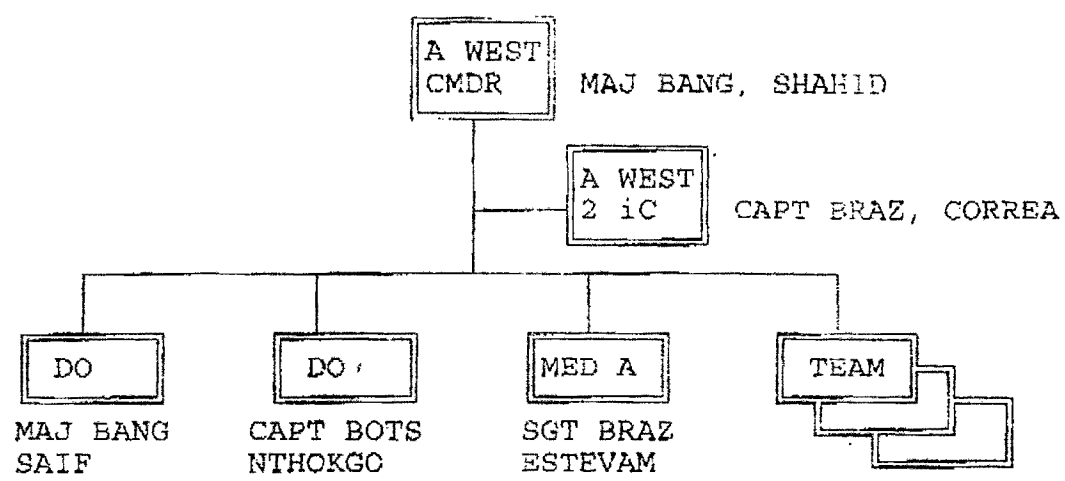

UNOMUR - AREA EAST HQ

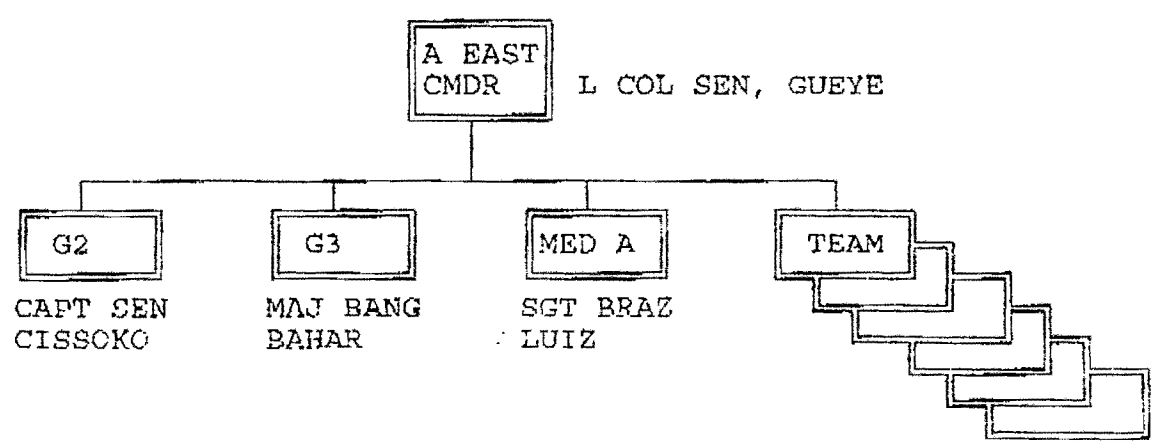

HQ

BANG, SHAHID

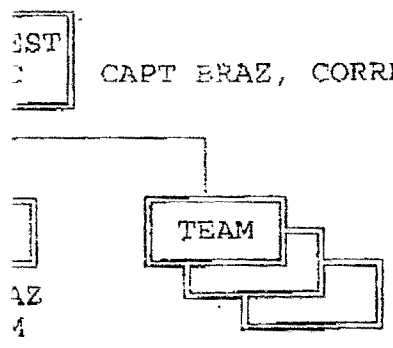

HQ

OL SEN, GUEYE

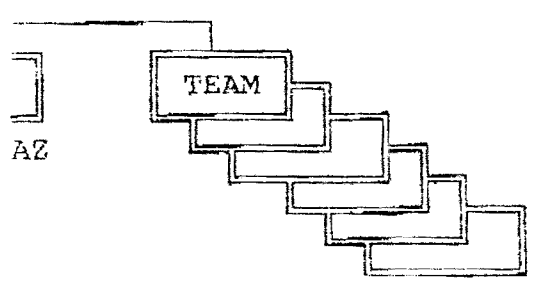

AREA WEST TEAMS

Commander area west: Maj Shahid (Bang)
Second in command : Cap Correia (Braz)
Medical assistant : Sgt Estevam (Braz)
Duty officer : Maj Saif (Bang)
Duty officer : Cap Nthokgo (Bots)

TEAM	POSITION	RANK	NAME	COUNTRY	REMARKS
A	TEAM LEADER	MAJ	LABBANCZ	HUNGARY	
	TEAM 2IC	MAJ	AKBAR	BANGLADESH	
	TEAM 3IC	CAP	LEBOTSE	BOTSWANA	
	TEAM UNMO	CWO	TONKES	NETHERLANDS	
	TEAM UNMO	CAP	LÔ	SENEGAL	
	TEAM UNMO	MAJ	NASIR	BANGLADESH	
B	TEAM LEADER	MAJ	MONZUR	BANGLADESH	
	TEAM 2IC	CWO	AERTS	NETHERLANDS	
	TEAM 3IC	MAJ	SAJED	BANGLADESH	
	TEAM UNMO	MAJ	KANTOR	HUNGARY	
	TEAM UNMO	CAP	JORGE	BRAZIL	
	TEAM UNMO	CAP	DLODLO	ZIMBABWE	
C	TEAM LEADER	CAP	MOLEFI	BOTSWANA	
	TEAM 2IC	CAP	N'DIONG	SENEGAL	
	TEAM 3IC	CWO	WEVER	NETHERLANDS	
	TEAM UNMO	MAJ	MAGADZE	ZIMBABWE	
	TEAM UNMO	MAJ	KUCERKA	SLOVAKIA	
	TEAM UNMO	MAJ	SOHEL	BANGLADESH	

UNOMUR KABALE UGANDA

UNOMUR - AREA WEST

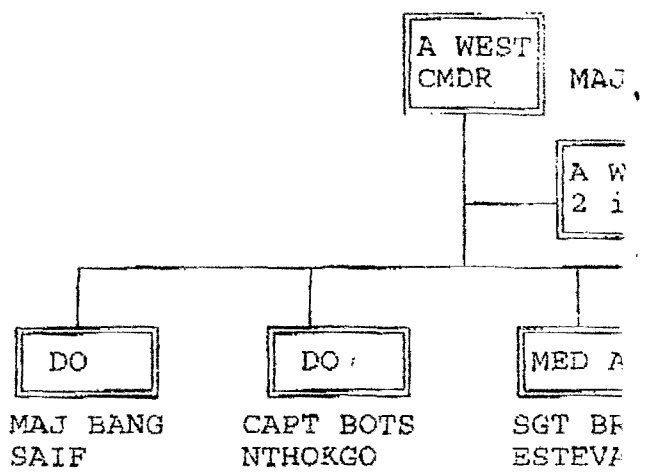

UNOMUR - AREA EAST

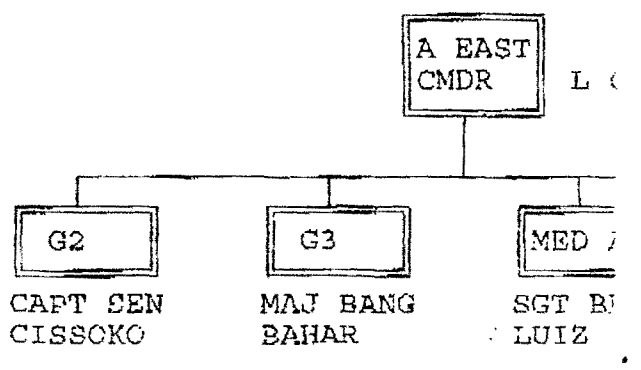

AREA TEAMS (D-I)

Commander area east: Lcol Gueye (Sen)
G2 : Cap Cissoko (Sen)
G3 : Maj Bahar (Bang)
Medical assistant : Sgt Luiz (Braz)

TEAM	POSITION	RANK	NAME	COUNTRY	REMARKS
D	TEAM LEADER	LCOL	BAVOLAR	SLOVAKIA	
	TEAM 2IC	CAP	BRUNO	BRAZIL	
	TEAM 3IC	MAJ	DIDAR	BANGLADESH	
	TEAM UNMO	CAP	KEALOTSWE	BOTSWANA	
	TEAM UNMO	CAP	STANG	SLOVAKIA	
	TEAM UNMO	CAP	ALVES	BRAZIL	
E	TEAM LEADER	MAJ	SZABO	HUNGARY	
	TEAM 2IC	MAJ	MOZAMMEL	BANGLADESH	
	TEAM 3IC	CWO	LEPELAAR	NETHERLANDS	
	TEAM UNMO	CAP	RIBAMAR	BRAZIL	
	TEAM UNMO	CAP	MAPEDZAMOMBE	ZIMBABWE	
	TEAM UNMO	MAJ	RAHMAN	BANGLADESH	
F	TEAM LEADER	CAP	ELBERS	NETHERLANDS	
	TEAM 2IC	MAJ	NDLOVU	ZIMBABWE	
	TEAM 3IC	MAJ	MRACKA	SLOVAKIA	
	TEAM UNMO	CAP	MOJAPELO	BOTSWANA	
	TEAM UNMO	MAJ	REZA	BANGLADESH	
	TEAM UNMO	CAP	SOW	SENEGAL	
G	TEAM LEADER	CAP	SAMBA	SENEGAL	
	TEAM 2IC	MAJ	IQBAL (arty)	BANGLADESH	
	TEAM 3IC	CAP	QUEIROZ	BRAZIL	
	TEAM UNMO	MAJ	CHIDAWANYIKA	ZIMBABWE	
	TEAM UNMO	CAP	SERUMOLA	BOTSWANA	
	TEAM UNMO	MAJ	AMIN	BANGLADESH	
H	TEAM LEADER	MAJ	NASIM	BANGLADESH	
	TEAM 2IC	CAP	TAMOCHA	BOTSWANA	
	TEAM 3IC	CAP	BADJI	SENEGAL	
	TEAM UNMO	CWO	WILLEMSEN	NETHERLANDS	
	TEAM UNMO	CAP	RICARDO	BRAZIL	
	TEAM UNMO	MAJ	SADIQ	BANGLADESH	
I	TEAM LEADER	LCOL	NGWENYA	ZIMBABWE	
	TEAM 2IC	CAP	BA	SENEGAL	
	TEAM 3IC	MAJ	HORVATH	SLOVAKIA	
	TEAM UNMO	CAP	MOLEOFI	BOTSWANA	
	TEAM UNMO	LCOL	MUTEMASANGO	ZIMBABWE	
	TEAM UNMO	MAJ	IQBAL (inf)	BANGLADESH	

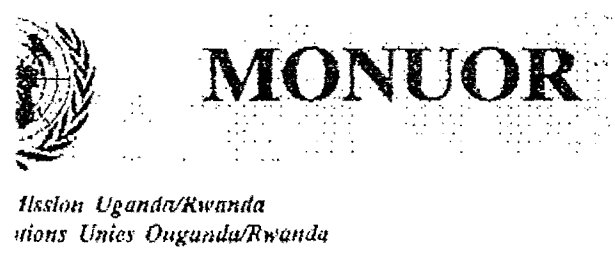

STAFFING

As 17 January 1994

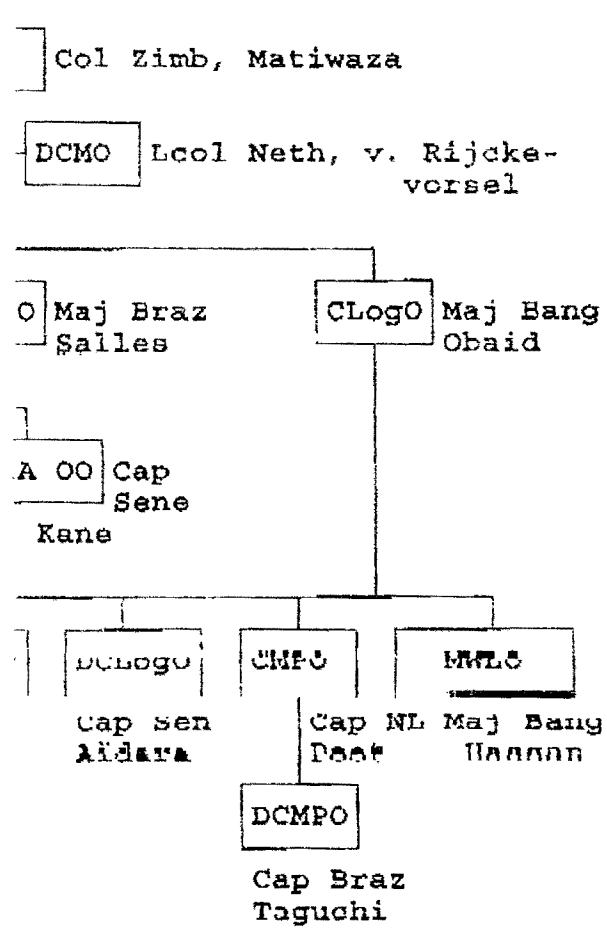

1. **UNOMUR TRANSPORT STATE**

a. Transport use in OPS/Military purpose - 20
b. Transport used by civilian staff/Office - 7

c. Total nos. of transport in UNOMUR - 27
d. Distribution of transport in military operation side

(1) 8x4/4 to Area East
(2) 5x4/4 to Area West
(3) 1x ambulance
(4) 1x4/4 for Duty Officer in Mission HQ
(5) 6x4/4 in mission pool& for Appt Holders
(1X/4/4 CMO
1X4/4 DCMO
1X4/4 MAJ HASAN KAMPALA
2x4/4 Pool)

Total 20 vehicles

2. **UNOMUR COMMUNICATION STATE**

a. Walkie Talkies - We have a total of 18 Walkie Talkies. The distributions are as follows:

(1) Area East - 6
(2) Area West - 5
(3) Mission HQ staff - 6
(4) Military liaison Officer in Kampala - 1

b. Repeater Station - A Repeater station was installed to improve communications, our previous comms problems with Cyanika are now over we need a base station in Area West HQ. A 2nd Repeater Station is going to be installed near the Lubirizi area to cover the whole of operational area.

c. Radio Set in 4/4 - All operational 4x4 vehicles are now fitted with Motorola radio sets.

Deployment

CP1 and 3 are manned on 24/7 basis, plans are at an advanced stage to up grade the operational manning of Lubirizi to 24/7 irrespective of whether the infrastructure is complete. The urgency to rapidly mann Lubirizi on a 24/7 is precipitated by the increased movement of people and vehicles of late. Temporarily the teams will leave in tents up to the time when their accommodation at Lubirizi is ready. A section of NRA soldiers plus one X Officer have been lined up for the task.

Four (4) Caravans, two at each CP (Bigaga and Kafunzo) are being arranged but still far out of sight, recommendations sent to NY.

20-01-94 11:46 [7] #7
UNOMUR KABALE UGANDA

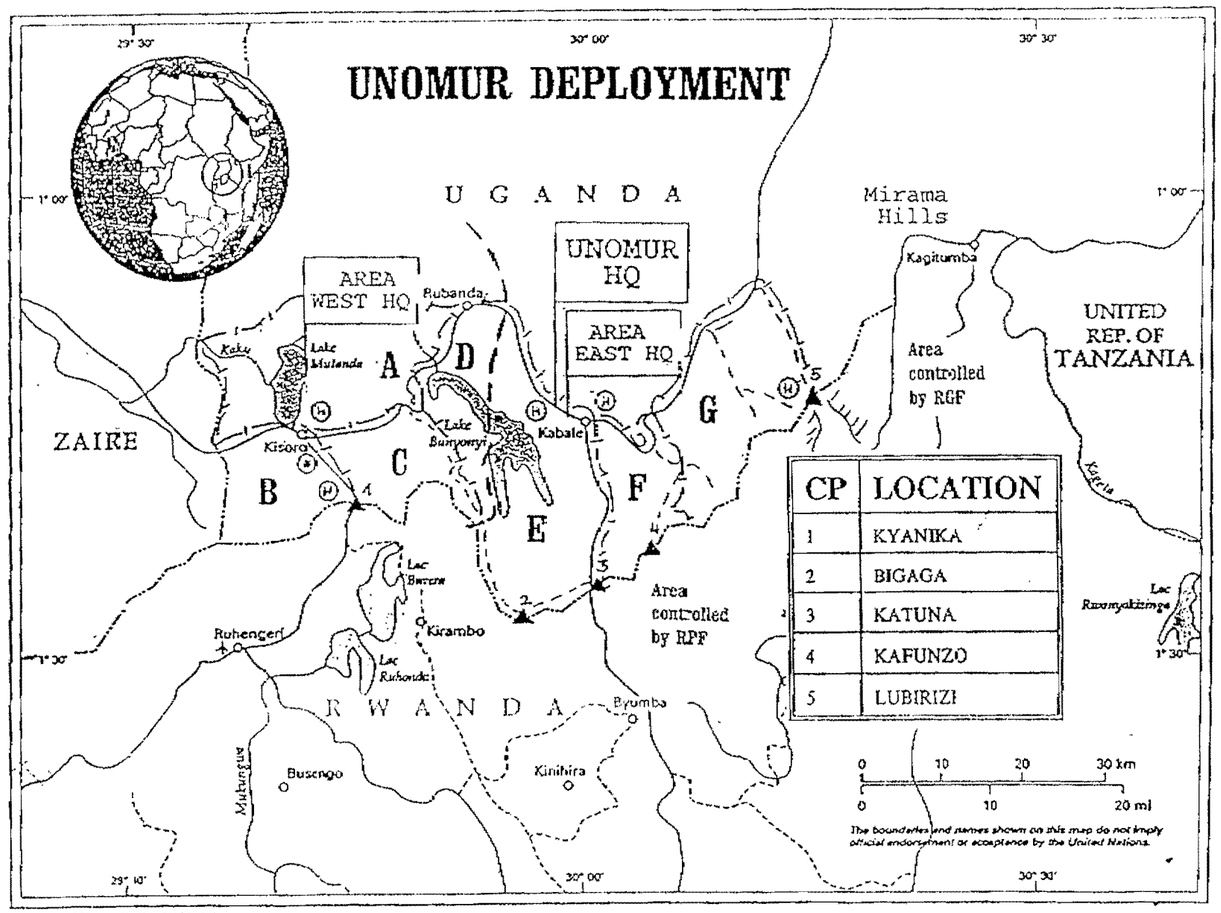

CP	LOCATION
1	KYANIKA
2	BIGAGA
3	KATUNA
4	KAFUNZO
5	LUBIRIZI

MAP NO. 3778.1 UNITED NATIONS
APRIL 1993

DETAILED ORGANIZATION OF NRA SUPPORT

1. **Personnel**

To date, the NRA has provided a total of five (5) Liaison Officers (four (4) in kabale and one (1) in Kampala and 65 soldiers which are deployed as follows:

	Officers	Other Ranks
Kabale mission HQ	3	8
Area East	1	37
Area West	1	20

One Officer and a Section of Seven soldiers are deployed at Katuna and four (4) soldiers are at Cyanika on permanent basis. The remainder provide escort and guard duties.

2. **Transport:**

The NRA transport situation is very desperate up to now only two (2) 4x4 landrovers have been given to the NRA by their Army HQ. These vehicles are old and therefore, their serviceability is doubtful. At present, only used for purely admin. by the NRA Officers. Their monthly fuel allocation of 2000 litres is by far insufficient. By modest calculations a minimum of 7500 litres a month will be adequate.

One vehicle is allocated to their HQ in Kabale while one is in Kisoro

3. **Communication:**

The NRA has no comms. They rely heavily on a single Walkie Talkie radio on loan from UNOMUR. Of recent, they also acquired a telephone in their Office. This is indeed very sad and our patrols are seriously affected as a result thereof.

NRA LIAISON ORGANIZATION

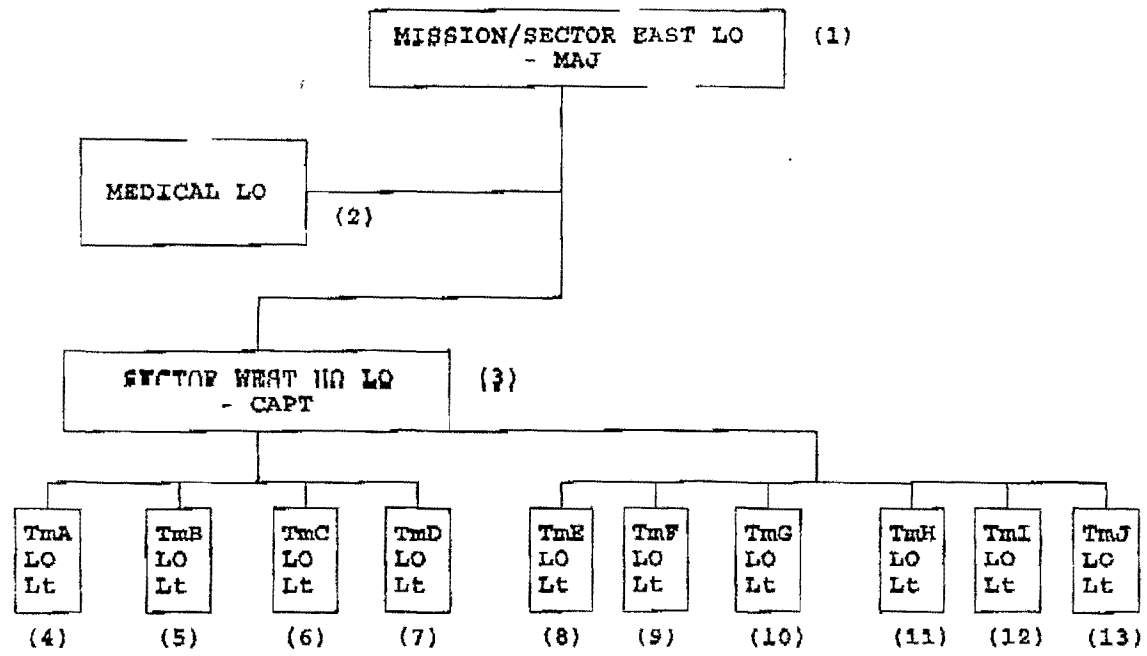

(a) NRA has so far provided
1 x Major
4 x Lts

(b) Outstanding 8 x Officers

MINUAR
LIAISON F.A.R
BP 749 KIGALI
Tel 84282

Kigali, le 17 Jan 94

N° 11/MINUAR/LN/SITREP/94

Au Comd de la Force MINUAR
KIGALI

OBJET : Prolifération des visites de la population civile dans l'aire occupée par le Bataillon FPR et retour précoce des réfugiés.

1. J'ai l'honneur de porter à votre connaissance que nous constatons une prolifération des visites de la population civile dans le palais du C.N.D, zone occupée par le Bn FPR à KIGALI. Il n'y a pas de réglementation de ces entrées et sorties si bien que certains entrent mais ne sortent pas avec possibilité d'accroître le nombre de Militaires de ce Bataillon par des voies détournées. Cela suscite des soucis particulièrement en ce moment où des informations non encore vérifiées font état de beaucoup d'infiltrés des éléments du FPR dans KIGALI. Il est trop tôt d'autoriser une telle libéralisation de va et vient dans une zone non contrôlée par le FPR. Ce volet est donc à maîtriser davantage et les autorités gouvernementales voudraient savoir les mesures prises à ce propos. Je suggère en outre que l'ordre de bataille de ce bataillon soit connu de la MINUAR et que pour une identification plus aisée et plus sécurisante, chaque militaire du Bataillon FPR porte un badge avec photo.

2. Il convient de vous signaler en outre que plus de deux cents familles de réfugiés éleveurs en provenance de l'UGANDA ont déjà franchi la frontière et occupent actuellement les terres et les biens abandonnés par les déplacés de guerre. Cette situation risque d'engendrer des désordres ou même des conflits entre les réfugiés et les déplacés de guerre. Ce retour est trop précoce pour autant que le calendrier de retour de ces réfugiés n'est pas encore établi. Il aurait fallu que cette opération attende la mise en place des institutions de transition à base élargie, seules habilitées à établir ce calendrier. Pour éviter des confrontations inutiles, il urge de contacter les autorités gouvernementales et celles du FPR avec celles de l'UGANDA afin de pouvoir donner une suite à ce problème épineux.

RWABALINDA Ephrem
Lt Col BEM
Chef LO FAR MINUAR

C.P.I :
- MINADEF
- Chef EM AR
- Chef EM Gd N

RECEIVED
OFFICE OF FC
Date 18/1/94
No 449 By S.R

UNITED NATIONS ASSISTANCE MISSION FOR RWANDA
UNAMIR

(MISSION DES NATIONS UNIES POUR L'ASSISTANCE AU RWANDA)
(MINUAR)

KIGALI RWANDA

1310157
OUTGOING FAX NO. KMF46

PAGE 1 OF 1

TO:MATIWAZA\UNOMUR\KABALE	FROM:DAILAIRE\UNAMIR\KIGALI
PREFIX/NO: MISC-34	DATE: 15 JAN 94
ATTN: COL MATIWAZA	PHONE: 250-84271
FAX NO: 256-486-23816	FAX NO: 250-84265
INFO: FAX NO:	DRAFTED BY: MAJ BEARDSLEY FILE REF:
INTERNAL DISTRIBUTION:	
SUBJECT: INFORMATION REQUIRED FOR CMO MEETINGS IN KAMPALA	
REFERENCE:	

1. UPON ARRIVAL OF THE CMO IN KAMPALA ON 18 JAN 94 THE FOLLOWING INFORMATION ON PAPER IS TO BE PROVIDED:

A. DETAILED ORGANIZATION OF UNOMUR INCLUDING TEAMS(TO INCLUDE NAMES, COUNTRIES AND DEPLOYMENT), TRANSPORT STATE, COMMUNICATIONS STATE AND DEPLOYMENT MAP.

B. DETAILED ORGANIZATION OF NRA SUPPORT TO UNOMUR TO INCLUDE PERSONNEL, TRANSPORT AND COMMUNICATIONS.

C. A PROGRESS REPORT ON THE REORGANIZATION OF SECTOR EAST HEADQUARTERS TO FORM THE 10TH UNMO TEAM AND THE DATE OF ITS OPERATIONAL DEPLOYMENT AND WHERE IT WILL DEPLOYED.

2. IT IS IMPERATIVE THAT THIS INFORMATION BE PROVIDED IN DETAIL SO THAT DETAILED DISCUSSIONS CAN BE HELD WITH UGANDAN AND NRA OFFICIALS.

FC

TOT 1020Z

UNOMUR MONUOR

14152

12 JAN 1994

United Nations Observer Mission Uganda/Rwanda
La Mission d'observation des Nations Unies Ouganda/Rwanda

FAX NO: 48
12 JANUARY 1994

PAGE 1 OF 2

MKF 48

TO: BGEN DALLAIRE, FC UNAMIR	FROM: MATIWAZA A/CMO, UNOMUR KABALE
FAX NO: 07-84265	FAX NO: 256 486-23816
SUBJECT: APPOINTMENT FOR BGEN R. DALLAIRE	

MISC 40

PLEASE FIND ATTACHED HEREWITH THE FAX WHICH WE RECEIVED FROM MAJ ZAKYE ABOUT YOUR APPOINTMENT WITH THE MINISTER OF STATE FOR DEFENCE AND THE ARMY COMMANDER.

BEST REGARDS.

ADC
Perfect
12/1

FC

RECEIVED
OFFICE OF FC
Date 12/1/94
No 402 By PA/FC

~~FIN 41~~ 48 2/2

FROM: MAJ ZAKYE CLO
FOR: COL BEN MATIWAZA
INFO: DCMO
DATE: 12-1-94

PSE INFO BRIG GEN R. DALLAIRE THAT HIS MEETING HAS BEEN FIXED ON WED 19 JAN 94 AT 1100 HRS. HE WILL MEET THE MSD (MINISTER OF STATE FOR DEFENCE) AND THE ARMY COMMANDER AT THE SAME TIME AND DATE.

C

C

CMO CMPO

MESSAGES

11 JAN 1994

General,

Col Rickervorsel, UNOMUR, called to say that he had received a telephone call from Maj Kazye, CLO NRA, saying that the Minister of Defense of Uganda will not be able to receive you this week.

Maj Zakye will inform Col Rickervorsel tomorrow of a date, next week, when the Minister will be able to meet with you.

Thank you.

Susana

UNITED NATIONS NATIONS UNIES

POSTAL ADDRESS—ADRESSE POSTALE UNITED NATIONS, N.Y. 10017
CABLE ADDRESS—ADRESSE TELEGRAPHIQUE UNATIONS NEWYORK

REFERENCE:

UNITED NATIONS OBSERVER MISSION TO
UGANDA-RWANDA
U N O M U R

Kigali, 11 January 1994

Your Excellency,

Please find attached a letter to His Excellency the Minister of Defense of the Republic of Uganda concerning freedom of movement for Military Observers of UNOMUR.

I should very much appreciate it if you could forward this letter, by facsimile, to the Ugandan Minister of Defense. It is requested that the possibility of a meeting with the Minister on this subject and other of similar nature be explored.

Thanking you in advance for your good offices, please accept, Your Excellency, the assurances of my highest esteem and consideration.

Roméo A. Dallaire
Brigadier-General
Chief Military Observer
UNOMUR

His Excellency Mr Ignatius B. KATETEGIRWE
Ambassador of the Republic
of Uganda
Kigali

UNITED NATIONS NATIONS UNIES

POSTAL ADDRESS—ADRESSE POSTALE: UNITED NATIONS, N.Y. 10017
CABLE ADDRESS—ADRESSE TELEGRAPHIQUE: UNATIONS NEWYORK

REFERENCE:

UNITED NATIONS OBSERVER MISSION TO
UGANDA-RWANDA
U N O M U R

Kigali, 11 January 1994

Your Excellency,

Please find attached a letter to His Excellency the Minister of Defense of the Republic of Uganda concerning freedom of movement for Military Observers of UNOMUR.

I should very much appreciate it if you could forward this letter, by facsimile, to the Ugandan Minister of Defense. It is requested that the possibility of a meeting with the Minister on this subject and other of similar nature be explored.

Thanking you in advance for your good offices, please accept, Your Excellency, the assurances of my highest esteem and consideration.

Roméo A. Dallaire
Brigadier-General
Chief Military Observer
UNOMUR

His Excellency Mr Ignatius B. KATETEGIRWE
Ambassador of the Republic
of Uganda
Kigali

(F)

UNITED NATIONS NATIONS UNIES

POSTAL ADDRESS—ADRESSE POSTALE UNITED NATIONS, N.Y. 10017
CABLE ADDRESS—ADRESSE TELEGRAPHIQUE: UNATIONS NEWYORK

REFERENCE:

UNITED NATIONS OBSERVER MISSION
TO UGANDA-RWANDA
U N O M U R

Kigali, 10 January 1994

Excellency,

According to the information letter dated 16 August 1993, addressed by the Permanent Representative of the Republic of Uganda in the United Nations, Prof Perezi K. Kamunanwire, to the Secretary-General of the United Nations, your government had completely adhered to Security Council resolution 846 (1993) of 22 June 1993, which established the United Nations Observer Mission Uganda-Rwanda (UNOMUR) on the Ugandan side of the border. It was required in the agreement that freedom of movement for the Military Observers inside the mission area was a condition "sine qua non" to perform their duties in a proper way. This agreement is still valid as UNOMUR's mandate is extended by Security Council resolution 891 (1993) of 20 December 1993.

However, on several occasions our movement was restricted by NRA officers without any reasonable explanation. The lastest of these events occurred on 04 January of this year, at 2300 hours, when one of our patrols was delayed by the NRA post at KASHEKYE, while it was following a suspected truck which was moving to the border at night. This attitude is a clear violation of the agreement between the United Nations and the Government of Uganda, and I kindly request your support to avoid that events of this nature happen again in the future. I should like to reiterate that freedom of movement is a vital condition for the Military Observers of UNOMUR to carry on with their tasks.

His Excellency the
Minister of Defense of the
Republic of Uganda
Kampala

Please accept, Excellency, the assurance of my highest consideration.

Roméo A. Dallaire
Brigadier-General
Chief Military Observer
UNOMUR