Administrative Files
Administrative Office
Administration — ADM/036
Sanso Co. Ltd, Tokyo - Equipment and Supplies 18/02/1971 - 12/10/1972

PLEASE RETAIN
ORIGINAL ORDER

Clear N.H.L. 3/12/08

UN ARCHIVES
SERIES S-0685
BOX 5
FILE 9
ACC. DAG 13/2.2.1.0

FILE

CABLE ADDRESS:
SANSOMASUNARY TOKYO

TEL: TOKYO 433-4331~4
431-1469

SANSO CO., LTD.

NO. 31-6, 1-CHOME,
HAMAMATSU-CHO, MINATO-KU
105-TOKYO, JAPAN

Tokyo, 12 October 1972
Letter No.1012

Ref. UNKURK

Mr. George A. Humphries
Chief Administrative Officer
United Nations Commission for the
Unification and Rehabilitation of Korea
Yondong-Po P.O. Box 56
SEOUL, Korea

Dear Mr. Humphries,

Mode of shipment for PVA Blocks - Air parcel post, not UNIC POUCH

I have received your letter dated 3 October 1972.

I have duly noted that the PVC Blocks should be sent by air parcel post, instead of UNIC Pouch.

I expect that the PVC Block will be shipped around 30 October 1972.

Best regards, I am

Yours sincerely,

SANSO CO., LTD.,

T. Masunari

T.Masunari, President

5 October 1972

Dear Mr. Masunari,

Pro-forma Invoice No. 927—27 September 1972

We refer to the above pro-forma invoice which is acceptable to us and would appreciate the PVA blocks be forwarded via air parcel post as indicated by you instead of via pouch as previously requested.

Yours sincerely,

George A. Humphries
Chief Administrative Officer

Mr. T. Masunari
President
Sanso Co., Ltd
Tokyo

CABLE ADDRESS:
SANSOMASUNARY TOKYO

TEL: TOKYO 433-4331~4
431-1469

SANSO CO., LTD.

NO. 31-6, 1-CHOME,
HAMAMATSU-CHO, MINATO-KU
105-TOKYO, JAPAN

Tokyo, 27 September 1972
Letter No.927

Ref. UNCURK

Mr. George A. Humphries
Chief Adininstrative Officer
United Nations Commission for the
Unification and Rehabilitation of Korea
Yengdong-PO
P.O. Box 56
SEOUL, Korea

Dear Mr. Humphries,

Acknowledgement of order for PVA Polishing Blocks

I acknowledge receipt of your letter dated 14 September 1972 for your order for:

24 ea PVA Polishing Blocks, 6" x 3" x 1" @ $1.85 US$44.40

to be shipped to you by UN Pouch.

This is repeated order from you, but maker has no stock at all at present, and therefore to be treated by order made.

It takes 30 days and estimated despatching date will be end of October, which please approve.

..... I have pleasure in enclosing herewith our Proforma Invoice No.927 dated 27 September 1972 in duplicate.

Yours faithfully,

SANSO CO., LTD.,

T.Masunari, President

CABLE ADDRESS:
SANSOMASUNARY TOKYO

TEL: TOKYO 433-4331~4
431-1469

SANSO CO., LTD.

NO. 31-6, 1-CHOME,
HAMAMATSU-CHO, MINATO-KU
105-TOKYO, JAPAN

Tokyo, 27 September 1972
Proforma Invoice No. 927

Ref. UNCURK - Seoul

Mr. George A. Humphries
Chief Administrative Office
United Nations Commission for the
Unification and Rehabilitation of Korea
Yongdong-po P.O. Box 56
SEOUL, Republic of Korea

PROFORMA INVOICE

Item No.	Description	Quantity	Unit	Ex-godown Tokyo Unit Price US$	Ex-godown Tokyo Extension US$
	Please refer to your letter dated 14 September 1972.				
1.	PVA Polishing Blocks, 6" x 3" x 1"	24	ea.	1.85	44.40
	Total - Ex-godown Tokyo (ship by: UN pouch)				US$44.40

Remarks:

1) Delivery: Within 40 days after receipt of your firm order.
2) Packing: Air parcel post packing.
3) Payment: Usual UNCURK method.
4) Maker: Nihon Tokushu Kent Co., Ltd., Tokyo.

SANSO CO., LTD.,

T. Masunari, President

14 September 1972

Dear Mr. Masunari,

Would you kindly deliver 24 each PVA Polishing blocks 6" x 3" x 1" to the UN Information Service for onward forwarding to this office via pouch.

It would be appreciated if this be treated as urgent. Payment will be made as soon as we receive your invoice.

Yours sincerely,

George A. Humphries
Chief Administrative Officer

Mr. T. Masunari
President
SANSO Co., Ltd.
Tokyo

CABLE ADDRESS:
SANSOMASUNARY TOKYO

TEL: TOKYO 433-4331~4
431-1469

SANSO CO., LTD.

NO. 31-6, 1-CHOME,
HAMAMATSU-CHO, MINATO-KU
105-TOKYO, JAPAN

Tokyo, 23 August 1972
Letter No. 823

Ref. UNCURK - Seoul

Mr. George A. Humphries
Chief Administrative Officer
United Nations Commission for the
Unification and Rehabilitation of Korea
Yongdong-po
P.O. Box 56
SEOUL, Republic of Korea

Dear Mr. Humphries,

Quotation for Ebara Electric Motor Pump

Thank you very much for your kind letter dated 3 August 1972.

..... We have pleasure in enclosing herewith our Quotation No.823 dated 23 August 1972 for the above and catalogue in duplicate.

Yours faithfully,

SANSO CO., LTD.,

T. Masunari, President

70.
$ 689.00

CABLE ADDRESS:
SANSOMASUNARY TOKYO

TEL: TOKYO 433-4331~4
431-1469

SANSO CO., LTD.

NO. 31-6, 1-CHOME,
HAMAMATSU-CHO, MINATO-KU
105-TOKYO, JAPAN

Tokyo, 23 August 1972
Quotation No. 823

Ref. UNCURK - Seoul

Mr. George A. Humphries
Chief Administrative Officer
United Nations Commission for the
Unification and Rehabilitation of Korea
Yongdong-po
P.O. Box 56
SEOUL, Republic of Korea

QUOTATION

Item No.	Description	Quantity	Unit	CIF Pusan Unit Price US$	CIF Pusan Extension US$
	Please refer to your letter dated 3 August 1972.				
1.	EBARA Centrifugal Electric Motor Driven Pump, Model 50MS3M, capacity: 200 L/m, total head: 40 m, speed: 1750 rpm, motor output: 3.7 kw, type: horizontal single suction, used liquid: clean water (normal temperature), Main material; casing: grey iron casting (JIS-FC), impeller: grey iron casting (JIS-FC), shaft: carbon steel (JIS-S35C), electric motor for driving : 200V 60Hz - 4P 3.7KW, type: horizontal shaft, totally-enclosed, fan cooled out door type, complete with following accessories: 1 set - Common base 1 set - Foundation bolt 1 set - Drain cock 2 sets - Air cock 1 set - Flexible coupling 1 set - Drain pipe for bearing 1 set - Priming water funnel and cock 2 pcs - Companion flange 1 pc. - Sluice valve 1 pc. - Check valve 1 pc. - Pressure gauge 1 set - 300 meters cable, 5.5 sq.cm 3 CAB (SVCAB)	1	set		1,085.00
	Total - C.I.F. Pusan				US$1,085.00

Remarks:

1)	Delivery:	Within 3 weeks after receipt of your firm order.
2)	Packing:	Export standard seaworthy packing.
3)	Payment:	Usual UNCORK method.
4)	Specification:	As per attached catalogue.
5)	Inspection:	Maker's inspection to be final.
6)	Validity:	Effective until 30 September 1972.
7)	Maker:	Ebara Manufacturing Co., Ltd.

SANSO CO., LTD.,

T. Masunari

T. Masunari, President

EBARA MULTI-STAGE VOLUTE PUMPS
4-Pole motor
Model-MS

APPLICATIONS

Agriculture
Waterworks
Construction
Factories
Mines

FEATURES

1. Since Ebara's unique double volute design (Registration of design 158541) is adopted, higher efficiency is guaranteed over a wide range of capacities, as compared with the conventional turbine pumps furnished with guide vanes.
2. Simple construction of the pumps endures long life of operation. The pumps are compact and light in weight, and moreover eliminate uncomfortable noises.
3. The pumps are so designed as not to exceed rated horse power at any pumping quantity.
4. Quick delivery of parts is ensured due to complete standardization.

STANDARD DESIGNS

Capacity :	0.09 − 3.15 m³/min
Head :	11 − 135 m
Revolutions (synchronous) :	50 Hz 1500 rpm 60 Hz 1800 rpm
Treated liquid :	Fresh water or equivalent
Temperature :	0° − 70°C (standard type) 71 − 80°C (water cooled bearing type) 81 − 100°C (water cooled bearing and gland type)
Pressure at suction inlet :	to 4 kg/cm²
Max. working pressure :	to 14 kg/cm² (pressure at shut-down including pressure at suction inlet)
Casing :	Double volute type
Impeller :	Single suction closed type, multi-stage
Shaft seal :	Gland packing
Bearing :	Ball bearing, sleeve metal
Rotating direction :	Clockwise as seen from motor side
Material :	Casing − FC, impeller − BC, shaft − S35C, Shaft sleeve − BC
Flange standards :	JIS 10 kg/cm² thin type (JIS 10 kg/cm² ordinary type is adopted for 7 kg/cm² and more of normal press. including press. at suction inlet)

CAT. NO.2700
GB-B (AB)

E RA MULTI-STAGE VOLUT PUMPS
4-Pole motor Model-MS

CONSTRUCTION

FEATURES OF DOUBLE VOLUTE

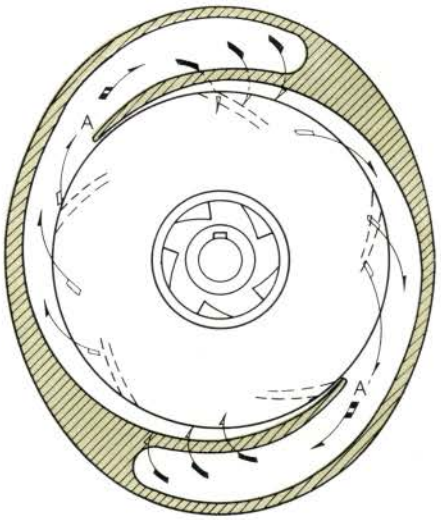

1. As known from the drawing, the water flow is equally divided by the "tongues" (A, A') located 180° from each other.
2. The water flow is symmetrical in the section meeting at the right angle with the shaft. Thus, the radial thrust on the rotating part is rationally balanced over any range of puming quantities.
3. The shape and contour of the vortex, determined on the basis of various basic studies, which directly flows into the impeller inlet of the next stage, together with precision designing and manufacturing of the three-dimensional impeller, results in very high efficiency.
4. The contour of the casing is narrower in section as compared with the conventional multi-stage pump. Therefore, this pump is very light in weight and compact.

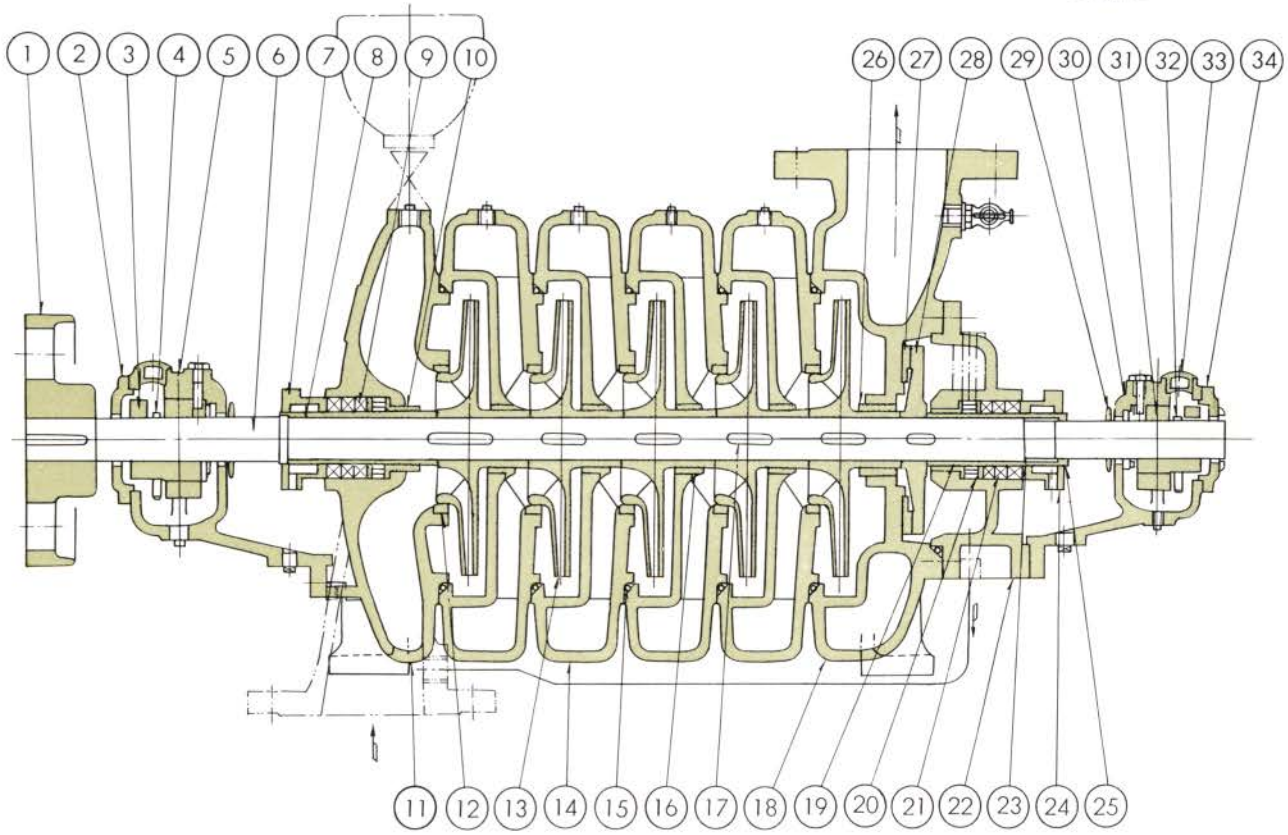

NO	PARTICULAR	MATERIAL	NO.FOR 1 SET	NO	PARTICULAR	MATERIAL	NO.FOR 1 SET	NO	PARTICULAR	MATERIAL	NO.FOR 1 SET
1	Coupling	Cast iron (FC)	1	13	Impeller	Bronze (BC)	–	25	Shaft sleeve nut	Bronze (BC)	1
2	Bearing cover	Cast iron (FC)	1	14	Interstage casing	Cast iron (FC)	–	26	Balancing bushing	Bronze (LBC)	1
3	Bearing metal	White metal (Wj)	1	15	Rubber ring	Rubber	–	27	Balancing ring	Bronze (LBC)	1
4	Oil ring	Bronze (BC)	1	16	Interstage diaphragm bushing	Bronze (LBC)	–	28	Balancing disc	Bronze (BC)	1
5	Bearing housing	Cast iron (FC)	1	17	Impeller key	Carbon steel (S45C)	–	29	Deflector	Rubber	2
6	Shaft	Carbon steel (S35C)	1	18	Discharge casing	Cast iron (FC)	1	30	Bearing housing	Cast iron (FC)	1
7	Gland	Bronze (BC)	1	19	Shaft sleeve	Bronze (BC)	1	31	Bearing metal	White metal (Wj)	1
8	Shaft sleeve	Bronze (BC)	1	20	Lantern ring bushing	Bronze (LBC)	1	32	Oil ring	Bronze (BC)	1
9	Packing	Asbestos	1	21	Packing	Asbestos	1	33	Bearing cap oil cover	Plastics	2
10	Lantern ring bushing	Bronze (LBC)	1	22	Balancing chamber	Cast iron (FC)	1	34	Bearing cover	Cast iron (FC)	1
11	Suction casing	Cast iron (FC)	1	23	Rubber ring	Rubber	2				
12	Casing ring	Bronze (LBC)	–	24	Gland	Bronze (BC)	1				

With regard to Parts Nos. 3 & 31, some models apply ball bearings.

SELECTION CHARTS

Description : 40 MS II 1.5(2)

- 1.5(2) — Motor output : kW (HP)
- II — Stage
- MS — Model
- 40 — Suction/discharge bore (mm)

50 Hz 1500 rpm

Models applying sleeve metals

Models applying ball bearings

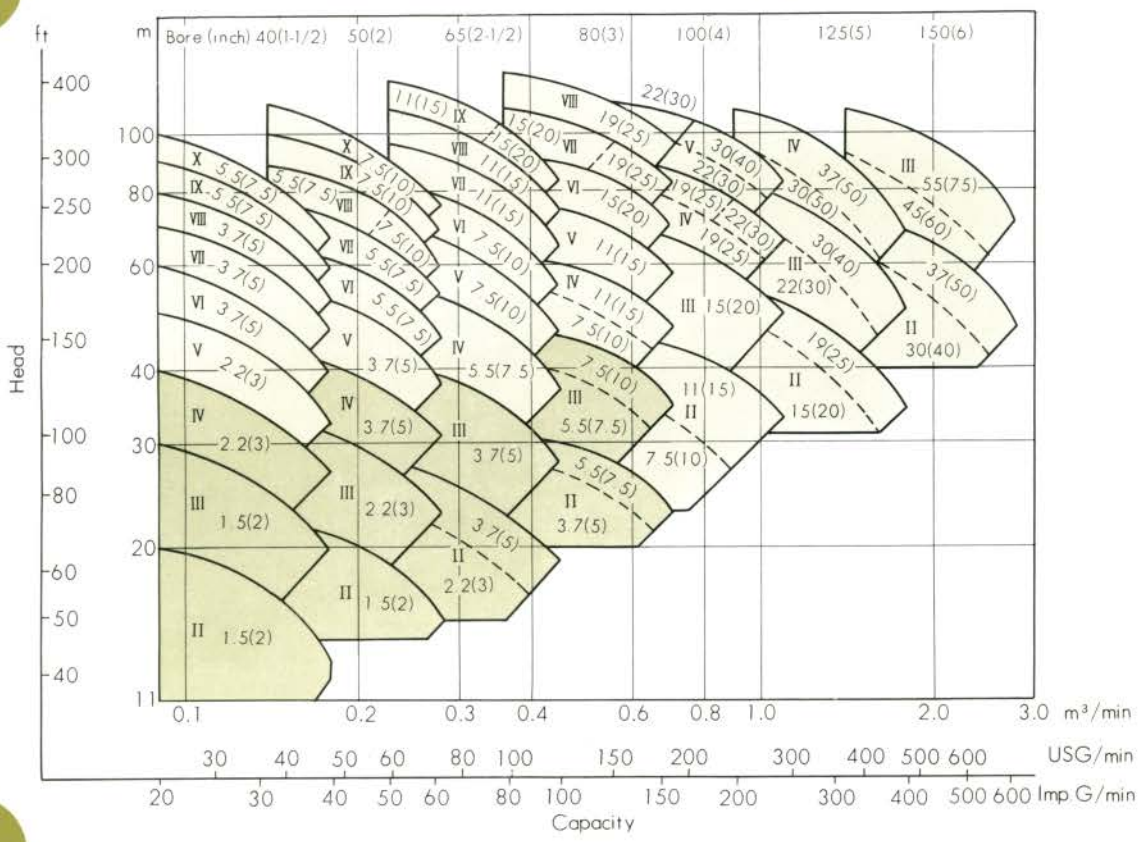

60 Hz 1800 rpm

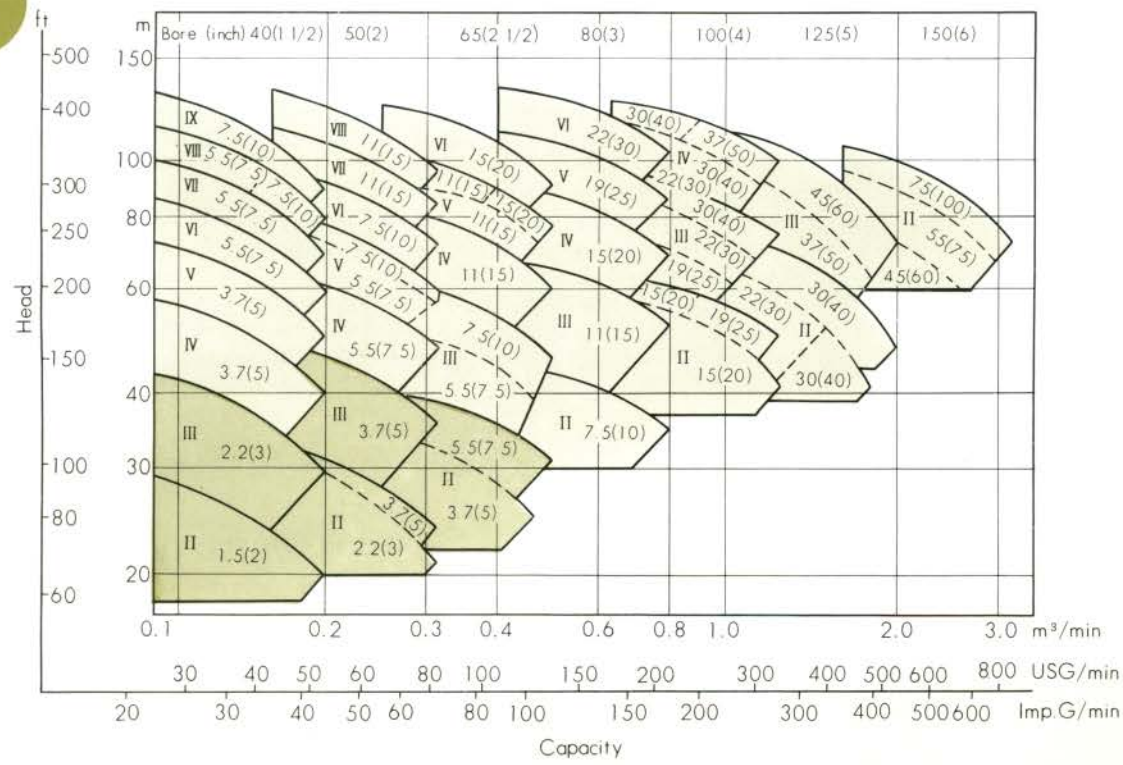

OUTLINE DRAWING & DIMENSIONS (60 Hz)

60 Hz

Nominal bore A	Stage	kW	B	P	C	D	E	H	M*	L*	BL	BN	BY	BY	O	Fl	Weight (kg)
(inch)	2	1.5	213	150	147	160	175	205	283.5	796.5	770	150	290	290	105	250	102
	3	2.2	213	205	147	160	175	205	313	881	800	150	290	290	145	250	118
	4	3.7	243	260	230	160	175	215	335	1071	900	180	310	310	166	250	145
	5	3.7	243	315	230	160	175	215	335	1126	1000	175	310	310	271	250	163
40 (1-1/2)	6	5.5	243	370	230	160	175	225	391	1237	1120	195	340	260	327	315	199
	7	5.5	243	425	230	160	175	225	391	1292	1120	195	340	260	327	315	221
	8	5.5	243	480	230	160	175	225	391	1347	1250	225	340	260	327	315	231
	8	7.5	243	480	230	160	175	225	430	1386	1250	225	340	260	388	315	246
	9	7.5	243	535	230	160	175	235	430	1441	1260	210	340	260	413	315	257
	2	2.2	220	158	147	180	195	215	313	841	770	150	290	290	105	250	123
	2	3.7	220	158	147	180	195	215	337	865	770	150	300	300	60	250	131
	3	3.7	220	218	147	180	195	215	337	925	850	150	300	300	170	250	145
	4	5.5	250	278	230	180	195	225	391	1152	1060	180	340	260	236	250	194
50 (2)	5	5.5	250	338	230	180	195	225	391	1212	1060	180	340	260	236	250	214
	5	7.5	250	338	230	180	195	225	430	1251	1060	180	340	260	236	250	223
	6	7.5	250	398	230	180	195	235	430	1311	1120	210	340	260	266	250	250
	7	11	250	458	230	180	195	255	526	1467	1330	230	390	260	371	315	286
	8	11	250	518	230	180	195	255	526	1527	1330	230	390	260	371	315	308
	2	3.7	234	180	167	195	210	235	337	921	830	150	300	300	135	250	150
	2	5.5	234	180	167	195	210	235	392	976	800	150	330	330	65	250	167
	3	5.5	260	245	240	195	210	245	391	1139	1000	175	340	340	171	250	189
65 (2-1/2)	3	7.5	260	245	240	195	210	245	430	1178	1000	175	340	340	171	250	207
	4	11	260	310	240	195	210	255	526	1339	1250	200	390	310	244	315	264
	5	11	260	375	240	195	210	255	526	1404	1250	200	390	310	244	315	296
	5	15	260	375	240	195	210	255	568	1446	1250	200	390	310	244	315	314
	6	15	260	440	240	195	210	265	568	1511	1330	230	390	310	319	315	348
	2	7.5	263	197	235	210	230	255	430	1128	1000	175	340	340	168	250	174
80 (3)	3	11	263	267	235	210	230	265	526	1294	1250	200	390	310	220	315	265
	4	15	263	337	235	210	230	265	568	1406	1250	200	390	310	220	315	315
	5	18.5	263	407	235	210	230	265	568	1481	1320	210	390	310	317	315	366
	6	22	263	477	235	210	230	280	590	1574	1400	220	430	310	312	315	430
	2	15	291	225	275	250	270	300	568	1362	1250	225	390	390	208	315	338
	2	18.5	291	225	275	250	270	300	568	1362	1250	225	390	390	208	315	372
	3	18.5	291	310	275	250	270	300	568	1447	1250	225	390	350	208	315	418
100 (4)	3	22	291	310	275	250	270	305	590	1470	1250	200	430	350	185	315	461
	3	30	291	310	275	250	270	305	628	1508	1250	200	430	350	185	315	517
	4	30	291	395	275	250	270	315	628	1593	1400	220	430	350	315	315	565
	4	37	291	395	275	250	270	315	670	1635	1400	220	480	350	260	315	605
	2	22	300	260	293	280	300	340	590	1447	1320	210	480	390	215	315	476
125 (5)	2	30	300	260	293	280	300	340	628	1485	1320	210	480	390	215	315	523
	3	37	300	360	293	280	300	340	670	1637	1400	220	480	390	223	315	606
	3	45	300	360	293	280	300	340	708	1802	1500	240	590	390	289	315	690
150 (6)	2	45	317	310	335	315	350	390	785	1751	1600	250	600	490	266	400	885
	2	55	317	310	335	315	350	390	823	1789	1600	250	600	490	266	400	985
	2	75	317	310	335	315	350	410	916	1882	1700	300	680	490	247	400	1185

Data specified in this catalog may be changed without notice.

EBARA

EBARA MANUFACTURING CO., LTD.

Head Office:
Tokyo Office:
Manila Office: , Philippines
Bankok Office: Bangkok, Thailand
Taipei Office:

SANSO CO., LTD.
NO. 27, 2-CHOME, SHIBA-HAMAMATSU-CHO
MINATO-KU, 105 TOKYO, JAPAN
CABLE ADDRESS: SANSOMASUNARY TOKYO
TEL: TOKYO (433) 4331~4 (431) 1469

Tel.: Tokyo (741)3111, (742)3111
Tel.: Tokyo (572)5611
Tel.: Manila 88-20-61 Ext. 213
Tel.: 31080~9
Tel.: 338010, 389044

SERVICE RANGE

Nominal bore mm (inch)	Model	Stage	Motor kW	Motor HP	Service range Q'ty m³/min	Head m	Q'ty m³/min	Head m	Q'ty m³/min	Head m
40 (1-1/2)	MS II M	2	1.5	2	0.1	29	0.16	24	0.2	20
	MS III M	3	2.2	3	0.1	43	0.16	36	0.2	30
	MS IV M	4	3.7	5	0.1	57	0.16	48	0.2	40
	MS V M	5	3.7	5	0.1	72	0.16	60	0.2	50
	MS VI M	6	5.5	7.5	0.1	86	0.16	72	0.2	60
	MS VII M	7	5.5	7.5	0.1	100	0.16	84	0.2	70
	MS VIII M	8	5.5	7.5	0.1	114	0.16	96		
	MS VIII M	8	7.5	10					0.2	80
	MS IX M	9	7.5	10	0.1	129	0.16	108	0.2	90
50 (2)	MS II M	2	2.2	3	0.2	29	0.25	26	0.315	21
	MS II M	2	3.7	5	0.2	31	0.25	28	0.315	24
	MS III M	3	3.7	5	0.2	46	0.25	42	0.315	36
	MS IV M	4	5.5	7.5	0.2	61	0.25	56	0.315	48
	MS V M	5	5.5	7.5	0.2	73	0.25	66	0.315	54
	MS V M	5	7.5	10	0.2	77	0.25	70	0.315	60
	MS VI M	6	7.5	10	0.2	92	0.25	84	0.315	72
	MS VII M	7	11	15	0.16	113	0.25	98	0.315	84
	MS VIII M	8	11	15	0.16	131	0.25	112	0.315	96
65 (2-1/2)	MS II M	2	3.7	5	0.315	32.5	0.4	28.5	0.46	25
	MS II M	2	5.5	7.5	0.315	39	0.4	36	0.5	31
	MS III M	3	5.5	7.5	0.315	49.5	0.4	44.5	0.46	39
	MS III M	3	7.5	10	0.315	59	0.4	54	0.5	46
	MS IV M	4	11	15	0.315	79	0.4	72	0.5	61
	MS V M	5	11	15	0.315	90	0.4	83	0.475	73
	MS V M	5	11	15	0.315	98	0.4	90		
	MS V M	5	15	20					0.5	77
	MS VI M	6	15	20	0.25	124	0.4	108	0.5	92
80 (3)	MS II M	2	7.5	10	0.5	43	0.63	40	0.8	35
	MS III M	3	11	15	0.5	65	0.63	60	0.8	52
	MS IV M	4	15	20	0.5	87	0.63	80	0.8	69
	MS V M	5	18.5	25	0.4	113	0.63	100	0.8	87
	MS VI M	6	22	30	0.4	134	0.63	120	0.8	103
100 (4)	MS II M	2	15	20	0.8	55	1.0	50	1.25	41
	MS II M	2	15	20	0.8	61	0.9	59		
	MS II M	2	18.5	25					1.25	50
	MS III M	3	18.5	25	0.8	70.5	1.03	62		
	MS III M	3	22	30	0.8	82.5	1.0	75	1.15	68.5
	MS III M	3	22	30	0.8	91.5	0.9	88.5		
	MS III M	3	30	40					1.25	75
	MS IV M	4	30	40	0.8	110	1.0	100	1.15	91
	MS IV M	4	30	40	0.63	126	0.9	118		
	MS IV M	4	37	50					1.25	100
125 (5)	MS II M	2	22	30	1.25	59	1.5	52		
	MS II M	2	30	40					1.8	40.5
	MS II M	2	30	40	1.25	70	1.6	62	2.0	48
	MS III M	3	37	50	1.25	88.5	1.6	73.5	1.8	63
	MS III M	3	45	60	1.25	105	1.6	93	2.0	72
150 (6)	MS II M	2	45	60	2.0	72	2.5	62	2.6	60
	MS II M	2	55	75	1.6	93	2.5	79	2.95	67
	MS II M	2	75	100	1.6	104	2.5	90	3.15	72

Nominal bore mm (inch)	Model	Stage	Motor kW	Motor HP	Service range Q'ty m³/min	Head m	Q'ty m³/min	Head m	Q'ty m³/min	Head m
40 (1-1/2)	MS II M	2	1.5	2	0.09	20	0.14	17	0.18	13
	MS III M	3	1.5	2	0.09	30	0.14	25	0.18	20
	MS IV M	4	2.2	3	0.09	40	0.14	33	0.18	27
	MS V M	5	2.2	3	0.09	50	0.14	42	0.18	33
	MS VI M	6	3.7	5	0.09	60	0.14	50	0.18	40
	MS VII M	7	3.7	5	0.09	70	0.14	58	0.18	47
	MS VIII M	8	3.7	5	0.09	80	0.14	67	0.18	53
	MS IX M	9	5.5	7.5	0.09	90	0.14	75	0.18	60
	MS X M	10	5.5	7.5	0.09	100	0.14	83	0.18	67
50 (2)	MS II M	2	1.5	2	0.18	21	0.225	19	0.28	15
	MS III M	3	2.2	3	0.18	31	0.225	28	0.28	23
	MS IV M	4	3.7	5	0.18	41	0.225	37	0.28	31
	MS V M	5	3.7	5	0.18	52	0.225	47	0.28	38
	MS VI M	6	5.5	7.5	0.18	62	0.225	56	0.28	46
	MS VII M	7	5.5	7.5	0.18	72	0.225	65	0.28	54
	MS VIII M	8	5.5	7.5	0.14	88	0.225	75		
	MS VIII M	8	7.5	10					0.28	61
	MS IX M	9	7.5	10	0.14	99	0.225	84	0.28	69
	MS X M	10	7.5	10	0.14	110	0.225	93	0.28	77
65 (2-1/2)	MS II M	2	2.2	3	0.28	21.5	0.34	19	0.4	16.5
	MS II M	2	3.7	5	0.28	26	0.355	23	0.45	19
	MS III M	3	3.7	5	0.28	39	0.355	35	0.45	28
	MS IV M	4	5.5	7.5	0.28	52	0.355	47	0.45	37
	MS V M	5	7.5	10	0.28	65	0.355	58	0.45	47
	MS VI M	6	7.5	10	0.28	78	0.355	70	0.45	56
	MS VII M	7	11	15	0.225	96	0.355	82	0.45	65
	MS VIII M	8	11	15	0.225	110	0.355	93	0.45	75
	MS IX M	9	11	15	0.225	123	0.355	105		
	MS IX M	9	15	20					0.45	84
80 (3)	MS II M	2	3.7	5	0.45	26.5	0.56	24	0.65	21
	MS II M	2	5.5	7.5	0.45	30	0.56	28	0.71	23
	MS III M	3	5.5	7.5	0.45	39.5	0.56	36	0.65	32
	MS III M	3	7.5	10	0.45	45	0.56	42	0.71	35
	MS IV M	4	7.5	10	0.45	53	0.56	48	0.65	43
	MS IV M	4	11	15	0.45	60	0.56	56	0.71	47
	MS V M	5	11	15	0.45	75	0.56	70	0.71	58
	MS VI M	6	15	20	0.45	90	0.56	84	0.71	70
	MS VII M	7	15	20	0.355	110	0.56	98		
	MS VII M	7	18.5	25					0.71	82
	MS VIII M	8	18.5	25	0.355	125	0.56	112	0.71	94
100 (4)	MS II M	2	7.5	10	0.71	33	0.8	30	0.9	27
	MS II M	2	11	15	0.71	43	0.9	39	1.12	33
	MS III M	3	15	20	0.71	64.5	0.9	58.5	1.12	49.5
	MS IV M	4	18.5	25	0.71	77	0.9	68	1.03	61
	MS IV M	4	18.5	25	0.71	86	0.9	78		
	MS IV M	4	22	30					1.12	66
	MS V M	5	22	30	0.71	96.2	0.9	85	1.03	76
	MS V M	5	22	30	0.56	113	0.8	103		
	MS V M	5	30	40					1.12	82.5
125 (5)	MS II M	2	15	20	1.12	44	1.4	36.5	1.6	31
	MS II M	2	18.5	25	1.12	51	1.4	45	1.8	34
	MS III M	3	22	30	1.12	66	1.4	55	1.6	45
	MS III M	3	30	40	1.12	76	1.4	67	1.8	51
	MS IV M	4	30	40	1.12	88	1.4	73	1.6	61
	MS IV M	4	37	50	0.9	108	1.4	90	1.8	68
150 (6)	MS II M	2	30	40	1.8	56	2.25	47	2.5	42
	MS II M	2	37	50	1.8	68	2.25	61	2.8	47
	MS III M	3	45	60	1.4	90	2.25	69	2.5	62
	MS III M	3	55	75	1.4	108	2.25	92	2.8	71

EBARA MULTI-ST/ : VOLUTE PUMPS
4-Pole motor Model-MS

OUTLINE DRAWING & DIMENSIONS (50Hz)

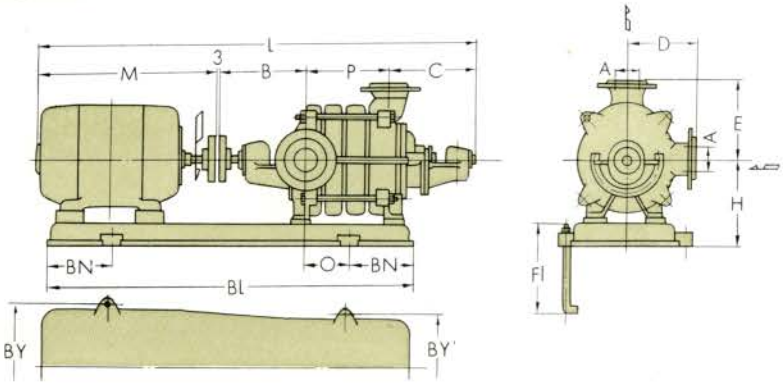

NOTES :

1. Flange dimensions are based on JIS B2212 (basic dimension of 10 kg/cm² pipe flange.)
2. Motor dimensions are based on JEM standards (E class). Approx. dimensions are adopted for pumps of 30 kW and more.
3. Dimenssions with * vary according to motor adopted

50Hz

(mm)

Nominal bore A (inch)	Stage	kW	B	P	C	D	E	H	M*	L*	BL	BN	BY	BY'	O	Fl	Weight (kg)
40 (1-1/2)	2	1.5	213	150	147	160	175	205	283.5	796.5	770	150	290	290	105	250	102
	3	1.5	213	205	147	160	175	205	283.5	815.5	770	150	290	290	105	250	112
	4	2.2	213	260	147	160	175	205	313	936	800	150	290	290	145	250	128
	5	2.2	243	315	230	160	175	215	313	1104	950	170	310	310	243	250	154
	6	3.7	243	370	230	160	175	215	335	1181	1000	175	310	310	271	250	176
	7	3.7	243	425	230	160	175	225	335	1236	1120	195	310	310	371	315	187
	8	3.7	243	480	230	160	175	225	335	1291	1120	195	310	310	371	315	198
	9	5.5	243	535	230	160	175	225	391	1402	1250	225	340	260	427	315	249
	10	5.5	243	590	243	160	175	235	391	1457	1260	210	340	260	452	315	260
50 (2)	2	1.5	220	158	147	180	195	215	283.5	811.5	700	130	260	260	85	250	113
	3	2.2	220	218	147	180	195	215	313	901	770	150	290	290	105	250	133
	4	3.7	220	278	147	180	195	215	337	985	850	150	300	300	170	250	158
	5	3.7	250	338	230	180	195	227	335	1156	950	170	310	310	219	250	186
	6	5.5	250	398	230	180	195	235	391	1272	1120	210	340	260	266	250	224
	7	5.5	250	458	230	180	195	235	391	1332	1120	210	340	260	305	250	240
	8	5.5	250	518	230	180	195	245	391	1392	1320	225	340	260	451	315	271
	8	7.5	250	518	230	180	195	245	430	1431	1320	225	340	260	451	315	279
	9	7.5	250	578	230	180	195	245	430	1491	1320	225	340	260	451	315	298
	10	7.5	250	638	230	180	195	245	430	1551	1400	220	340	260	496	315	312
65 (2-1/2)	2	2.2	234	180	167	195	210	235	313	897	750	150	300	300	70	250	137
	2	3.7	234	180	167	195	210	235	337	921	830	150	300	300	135	250	150
	3	3.7	234	245	167	195	210	235	337	986	830	150	300	300	135	250	160
	4	5.5	260	310	240	195	210	245	391	1204	1000	175	340	340	210	250	221
	5	7.5	260	375	240	195	210	255	430	1308	1180	210	340	340	316	315	265
	6	7.5	260	440	240	195	210	255	430	1373	1180	210	340	340	316	315	287
	7	11	260	505	240	195	210	265	526	1534	1330	230	390	310	361	315	331
	8	11	260	570	240	195	210	265	526	1599	1500	250	390	310	469	315	267
	9	11	260	635	240	195	210	265	526	1664	1500	250	390	310	469	315	371
	9	15	260	635	240	195	210	265	568	1706	1500	250	390	310	469	315	425
80 (3)	2	3.7	247	197	162	210	230	245	337	946	800	150	300	300	85	250	166
	2	5.5	247	197	162	210	230	245	392	1101	960	160	330	330	150	250	187
	3	5.5	247	267	162	210	230	245	392	1071	960	160	330	330	150	250	207
	3	7.5	247	267	162	210	230	245	431	1110	960	160	330	330	150	250	217
	4	7.5	263	337	235	210	230	255	430	1268	1120	180	340	310	240	250	263
	4	11	263	337	235	210	230	265	526	1364	1250	200	390	310	220	315	287
	5	11	263	407	235	210	230	265	526	1439	1320	210	390	310	317	315	319
	6	15	263	477	235	210	230	265	568	1551	1320	210	390	310	317	315	375
	7	15	263	547	235	210	230	280	568	1621	1500	240	430	310	466	315	391
	7	18.5	263	547	235	210	230	280	568	1621	1500	240	430	310	460	315	431
	8	18.5	263	617	235	210	230	280	568	1691	1500	240	430	310	460	315	447
100 (4)	2	7.5	291	225	275	250	270	290	430	1224	1000	175	340	340	135	250	291
	2	11	291	225	275	250	270	300	526	1320	1250	225	390	390	208	315	320
	3	15	291	310	275	250	270	300	568	1447	1250	225	390	390	208	315	387
	4	18.5	291	395	275	250	270	315	568	1532	1320	210	430	350	265	315	468
	4	22	291	395	275	250	270	315	590	1554	1400	220	430	350	315	315	565
	5	22	291	480	275	250	270	315	590	1640	1400	220	430	350	315	315	580
	5	30	291	480	275	250	270	315	628	1678	1400	220	430	350	315	315	612
125 (5)	2	15	300	260	293	280	300	325	568	1424	1200	220	390	390	154	315	405
	2	18.5	300	260	293	280	300	325	568	1424	1200	220	390	390	154	315	433
	3	22	300	360	293	280	300	340	590	1557	1320	210	480	390	215	315	529
	3	30	300	360	293	280	300	340	628	1595	1320	210	480	390	215	315	576
	4	30	300	460	293	280	300	340	628	1695	1400	220	480	390	295	315	615
	4	37	300	460	293	280	300	340	670	1737	1500	240	480	390	302	315	651
150 (6)	2	30	317	310	325	315	350	380	628	1594	1320	210	480	480	292	315	645
	2	37	317	310	325	315	350	380	670	1636	1500	240	480	480	265	315	666
	3	45	317	425	325	315	350	380	708	1789	1500	240	480	480	266	315	766
	3	55	317	425	325	315	350	380	746.5	1827	1500	240	530	480	266	315	766

3 August 1972

Dear Mr. Masunari,

We would appreciate receiving as quickly as possible your quotation for an Ebara electric pump with the following specifications:

1 ea EBARA electric motor driven PUMP, 200 v 60 c/s
Suction opening - 50 mm maximum
Delivery opening - 50 mm
Discharge - approx 200 litres per min.
Total head - 40 m.

300 metres Cable, electric outdoor, 5.5 wq. cm
3 CAB (SV CAB)

Yours sincerely,

George A. Humphries
Chief Administrative Officer

Mr. T. Masunari
President
SANSO Co., Ltd.
Tokyo

22 June 1972

Dear Mr. Masunari,

Reference your letter No. 609 dated 9 June 1972, please arrange early shipment of the permacoustic tiles.

Yours sincerely,

George A. Humphries
Chief Administrative Officer

Mr. T. Masunari
President
SANSO Co., Ltd.
Tokyo

CABLE ADDRESS:
SANSOMASUNARY TOKYO

TEL: TOKYO 433-4331~4
431-1469

SANSO CO., LTD.

EXPORT-IMPORT

NO. 27, 2-CHOME, SHIBA-HAMAMATSU-CHO, MINATO-KU
105-TOKYO, JAPAN

Tokyo, 9 June 1972
Letter No.609

Ref. UNCURK

Mr. George A. Humphries
Chief Administrative Officer
United Nations Commission for the
Unification & Rehabilitation of Korea
Yongdong-po P.O. Box 56
SEOUL, Korea

Dear Mr. Humphries,

Spefication of Permacoustic Tile

Thank you very much for your letter dated 26 May 1972, in which I have learned the size of 12" x 24" will not be suitable for replacement for a ceiling containing tiles of 12" x 12", which we ever shipped.

You may well say so, 12 x 12" is inconvenience for you.

However, maker said, it is very easy to cut, only lining on the tile by knife and shock by hammer behind the tile, so that you can make 12 x 12", a tile.

As informed before, the tiles are kept at Customs House and ready to ship by airfreight.

I should be most grateful, if you reconsider of it. Please note that half cost of the invoice is airfreight charge.

Yours faithfully,

SANSO CO., LTD.,

T.Masunari, President

OK

26 May 1972

Dear Mr. Masunari,

With reference to the permacustic tiles, I regret that the size quoted by you (12" x 24") will not be suitable since these are required to replace part of a ceiling containing tiles 12" x 12" and it will be difficult to re-arrange the metal rails.

We regret therefore at this time we will not be placing an order.

Yours sincerely,

George A. Humphries
Chief Administrative Officer

Mr. T. Masunari
President
SANSO Co., Ltd.
Tokyo

17 May 1972

Dear Mr. Masumari,

Unpaid Account

I sincerely regret that payment has not been effected by Mr. Kuzbari. Since it was a personal purchase and the bill was given to him at the time, I assumed that he would have settled directly with you. I shall write to Mr. Kuzbari but it may take some time before I receive an answer as he returned to New York during August 1971.

Yours sincerely,

George A. Humphries
Chief Administrative Officer

Mr. T. Masumari
President
SANSO Co., Ltd.
Tokyo, Japan

File

CABLE ADDRESS:
SANSOMASUNARY TOKYO

TEL: TOKYO 433-4331~4
431-1469

SANSO CO., LTD.

NO. 27, 2-CHOME, SHIBA-HAMAMATSU-CHO, MINATO-KU
105-TOKYO, JAPAN

Tokyo, 22 May 1972
Letter No.522

Ref. UNCURK (Personal)

Mr. George A. Humphries
Chief Administrative Officer
UNCURK
Yongdong-Po P.O. Box 56
SEOUL, Korea

Dear Mr. Humphries,

Unpaid Account of Mr. Kuzbari

Thank you very much for your letter dated 17 May 1972 on the above subject.

Please do not worry about it. I might be able to receive payment from Mr. Kuzbari, New York.

I am very sorry to trouble you, this small matter.

Yours sincerely,

SANSO CO., LTD.,

T. Masunari

T.Masunari, President

CABLE ADDRESS:
SANSOMASUNARY TOKYO

TEL:TOKYO 433-4331~4 431-1469

SANSO CO.,LTD.

NO. 27. 2-CHOME. SHIBA-HAMAMATSU-CHO. MINATO-KU
105-TOKYO. JAPAN

Tokyo, 22 May 1972
Letter No.522-2

Ref. UNCURK

Mr. George A. Humphries
Chief Administrative Officer
United Nations Commission for the
Unification & Rehabilitation of Korea
Yongdong-Po P.O. Box 56
SEOUL, Korea

Dear Mr. Humphries,

Order for Nittobo Mineration Permacustic Tiles

Reference is made to your letter dated 13 April 1972 and our quotation No.422 dated 22 April 1972.

Would you be kind enough to place an order to us for:

			CIF PUSAN (via Airfreight)
Item 1.	Nittobo Mineration Permacoustic Tiles		
	Size: 12" x 24" x 3/4" T.	3 doz. $22.00	$66.00

as the goods are ready to ship at Yokohama Custom House, without your approval.

Your kind acceptance would be highly appreciated.

Yours faithfully,

SANSO CO.,LTD.,

T.Masunari,President

CABLE ADDRESS:
SANSOMASUNARY TOKYO

TEL: TOKYO 433-4331~4
431-1469

SANSO CO., LTD.

(REGISTERED AIRMAIL)

NO. 27, 2-CHOME, SHIBA-HAMAMATSU-CHO, MINATO-KU
105-TOKYO, JAPAN

Ref. Requisition No. UNCURK 72/L-8

Tokyo, 12 May 1972
Letter No. 512

Mr. George A. Humphries
Chief Administrative Officer
United Nations Commission for
the Unification and Rehabilitation of Korea
(UNCURK)
Yongdogpo
P.O. Box 56
SEOUL, Korea

Dear Mr. Humphries,

Shipping Documents of BRIDGESTONE Brand Tubeless Tyres

Reference is made to your Requisition No. UNCURK 72/L-8 dated 15 March 1972 and our letter No. 424 dated 24 April 1972.

..... We have pleasure in enclosing herewith shipping documents of:

Item 1.	Bridgestone Brand Tubeless Tyres	855-15	24 ea.
2.	Ditto, but	825-14	12 ea.

which on board the "New Korea", Everett, sailed Moji, Japan on 10 May 1972 to Inchon, Korea, ETA on 14 May 1972.

Shipping document	Original	Copy
1. Bill of Lading No. MI-13	1	2
2. Commercial Invoice No. 3387	1	2
3. Packing List No. 3387	1	2
4. Measure List No. QM-2835	1	1
5. Insurance Policy No. 53 03387	1	1

We hope that the goods will reach to Seoul in good order.

We shoud be most grateful, if you could pay us US$568.80 C.I.F. Inchon, at your earliest convenience.

Yours faithfully,

SANSO CO., LTD.,

T. Masunari

T. Masunari, President

CABLE ADDRESS:
SANSOMASUNARY TOKYO

TEL: TOKYO 433-4331~4
431-1469

SANSO CO., LTD.

EXPORT-IMPORT

NO. 27, 2-CHOME, SHIBA-
HAMAMATSU-CHO, MINATO-KU
105-TOKYO, JAPAN

Tokyo, 23 May 1972
Receipt No. 523

Ref. Requisition No. UNCURK 72/L-8

RECEIPT

TO: United Nations Commission for
the Unification and Rehabilitation of Korea
(UNCURK)
Yongdogpo
P.O. Box 56
SEOUL, Korea

FROM; Sanso Co., Ltd.
No. 31-6, 1-chome, Hamamatsu-cho, Minato-ku
105 TOKYO, Japan

AMOUNT: US$568.80 (US dollars Five hundred sixty eight and 80/100 only).

FOR: Our Invoice No. 3387 dated 24 April 1972.

we have received payment for the above by your cheque No. 6383 dated 17 May 1972, drawn on the First National City Bank, New York, U.S.A.

SANSO CO., LTD.,

T. Masunari, President

Yongdongpo P.O. Box 56
Seoul, Korea

18 May 1972

Messrs. Sanso Co., Ltd.
No. 27, 2-chome, Shiba-
Hamamatsu-cho, Minato-ku,
105-Tokyo, Japan.

For attention Mr. T. Masunari,

Dear Sirs,

Our Requisition No. 72/L-8
Your Invoice No. 3387

..... Enclosed in our cheque No. 6383 for $568.80 in your favour, in settlement of Invoice No. 3387 covering Bridgestone Brand Tubeless Tyres.

Please acknowledge receipt.

Yours sincerely,

George A. Humphries
Chief Administrative Officer

Pr Menon.
Your comments Please
Sato

CABLE ADDRESS:
SANSOMASUNARY TOKYO

TEL: TOKYO 433-4321~4
431-1469

SANSO CO., LTD.

NO. 35-8, 1-CHOME,
HAMAMATSU-CHO, MINATO-KU
105-TOKYO, JAPAN

Tokyo, 22 April 1972
Letter No.422

Ref. UNKURA

Mr. George A. Humphries
Chief Administrative Officer
United Nations Commission for the
Unification & Rehabilitation of Korea
Tongdong-po P.O. Box 56
SEOUL, Korea

Dear Mr. Humphries,

Quotation for Hittobo Mineration Permacoustic Tile

Thank you very much for your letter dated 13 April 1972.

..... I have pleasure in enclosing herewith our Quotation No.422 dated 22 April 1972 in duplicate.

Please note that:

a) Size of 12" x 12" is out of stock and we quoted 12" x 24" as alternative.

b) Air freight is cheaper than ocean freight in this cargo.

c) Price is higher than before, due to volume of quantity.

Yours faithfully,

SANSO CO.,LTD.,

T.Masunari,President

CABLE ADDRESS:
SANSOMASUNARY TOKYO

TEL: TOKYO 433-4331~4
431-1469

SANSO CO., LTD.

NO. 31-6, 1-CHOME,
HAMAMATSU-CHO, MINATO-KU
105-TOKYO, JAPAN

Tokyo, 22 April 1972
Quotation No.422

Ref. UNKURK

Mr. George A. Humphries
Chief Administrative Officer
United Nations Commission for
the Unification & Rehabilitation of Korea
Yongdong-po P.O. Box 56
SEOUL, Korea

QUOTATION

Item No.	Description	Quantity	Unit	Unit price	Amount
	Please refer to your letter dated 13 April 1972.			CIF - PUSAN (via airfreight)	
1.	Nittobo Mineration Permacoustic Tiles				
	Size: 12" x 24" x 3/4" T.	3	doz	$22.00	$66.00
	(12" x 12" - Not available at present)				
	Total - C.I.F. PUSAN (Via airfreight)				US$66.00

Remarks: Delivery: Within 15 days after receipt of your order.
Payment: As usual.
Inspection: Maker's inspection to be final.
Maker: Nittobo.

Note: Airfreight is cheaper than ocean freight in this shipment.

SANSO CO.,LTD.,

T.Masumari,President

13 April 1972

Dear Mr. Masunari,

Would you kindly advise the costs CIF Pusan of the following items:

6 dozen Tiles, Nittobo Mineration Permacoustic

Size 12" x 12" x 3/4" T.

Yours sincerely,

George A. Humphries
Chief Administrative Officer

Mr. T. Masunari
President
SANSO Co., Ltd.
Tokyo, Japan

File

CABLE ADDRESS:
SANSOMASUNARY TOKYO

TEL: TOKYO 433-4331~4
431-1469

SANSO CO., LTD.

NO. 27, 2-CHOME, SHIBA-HAMAMATSU-CHO, MINATO-KU
105-TOKYO, JAPAN

Tokyo, 11 March 1972
Letter No. 311

Ref. UNCURK - Seoul

Mr. George A Humphries
UNCURK
Yongdongpo
Post Office Box 56
SEOUL, Korea

Dear Mr. Humphries,

Quoration for Tubeless Tyres

Thank you very much for your kind letter dated 21 February 1972.

..... We have pleasure in enclosing herewith our quotation No.311 dated 11 March 1972 for the above in duplicate and catalogue.

No same file
Catalogue looking

Yours faithfully,

SANSO CO., LTD.,

T. Masunari, President

CABLE ADDRESS:
SANSOMASUNARY TOKYO

TEL: TOKYO 433-4331~4
431-1469

SANSO CO., LTD.

NO. 27, 2-CHOME, SHIBA-HAMAMATSU-CHO, MINATO-KU
105-TOKYO, JAPAN

Tokyo, 11 March 1972
Quotation No. 311

Ref. UNCURK - Seoul

Mr. George A Humphries
UNCURK
Yongdongpo
Post Office Box 56
SEOUL, Korea

QUOTATION

Item No.	Description	Quantity	Unit	CIF Inchon Unit Price US$	CIF Inchon Extension US$
	Please refer to your enquiry Ref. UNCURK-Seoul dated 21 February 1972.				
1.	Bridgestone Brand Tubeless Tyres, 855-15, 4PR (SD)	24	ea.	16.30	391.20
2.	Ditto, but 825-14	12	ea.	14.80	177.60
	Total - C.I.F. Inchon (by surface freight)				US$568.80

Remarks:

1) Delivery: Within 45 days after receipt of your firm order.
2) Packing: Export standard packing.
3) Payment: Usual UNCURK method. ~~(Payable in Japanese currency)~~
4) Specification: As per attached catalogue.
5) Inspection: Maker's inspection to be final.
6) Maker: Bridgestone Tire Co., Ltd.

SANSO CO., LTD.,

T. Masunari, President

21 February 1972

Dear Mr.Masunari,

Would you kindly forward as soon as possible,

Prices CIF Inchon,of the following items:

24 each TYRES,855-15,6PR tubeless

12 each TYRES,825-14,6PR tubeless

Yours sincerely,

George A Humphries
UNCURK
Yongdongpo
Post Office Box 56
Seoul - Korea

Mr.T.Masunari,
President
SANSO Co.,Ltd.,
Tokyo, Japan.

CABLE ADDRESS:
SANSOMASUNARY TOKYO

TEL: TOKYO 431—1469 · 3153
436—2088 · 2089

SANSO CO., LTD.

NO. 27, 2-CHOME, SHIBA-HAMAMATSU-CHO, MINATO-KU
105-TOKYO, JAPAN

INVOICE (NO VALUE)

No.2437A

Date: 22 March 1971

Ref. No. ADM/036

Messrs. United Nations Commission for the
Unification and Rehabilitation of
Korea
Yongdong-po
P.O. Box 56
SEOUL, Korea

Invoice of One (1) package of BRIDGESTONE Brand Automotive Tyre.

Shipped from Tokyo, Japan to Seoul, Korea

Per Airfreight Sailing on or abt. 23 March 1971

Marks & Nos.	Description	Quantity	Unit	Unit Price US$	Extension US$
Item No.	REPLACEMENT OF NO COMMERCIAL VALUE				
1.	825-14 6PR D/W	1	ea.		16.00
	Total - F.O.B. Tokyo - Custom purpose only				US$16.00

Shipping Marks:

UNCURK 70/L-24

Address.

SANSO CO., LTD.,

T. Masunari, President

AIR WAYBILL NUMBER	AIR	EXECUTION DATE	TC	CHGS CODE	CURCY CODE	ARRIER USE ONLY	
AIRLINE PREFIX / SERIAL NO.	DEI	DAY/MTH/YR				FLIGHT/DAY	FLIGHT/DAY
131- 5517 6251							

131- 5517 6251

AIRPORT OF DEPARTURE(ADDRESS OF FIRST CARRIER)AND REQUESTED ROUTING	AIRPORT OF DESTINATION	FLIGHT/DAY	FLIGHT/DAY
TOKYO-NRT	SEOUL	31/05/71	

ADM/076

1/ ROUTING AND DESTINATION

TO	BY FIRST CARRIER	TO	BY	TO	BY	TO	BY
SEL	JL						

BOOKED

NOT NEGOTIABLE

AIR WAYBILL

(AIR CONSIGNMENT NOTE)

ISSUED BY

JAPAN AIR LINES

TOKYO, JAPAN

日本航空

MEMBER OF INTERNATIONAL AIR TRANSPORT ASSOCIATION

2/ CONSIGNEE'S ACCOUNT NUMBER | CONSIGNEE'S NAME AND ADDRESS

MESSRS. UNITED NATIONS COMMISSION FOR THE UNIFICATION AND REHABILITATION OF KOREA, TONGDONG-PO, P.O. BOX 56, SEOUL, KOREA.

If the carriage involves an ultimate destination or stop in a country other than the country of departure, the Warsaw Convention may be applicable and the Convention governs and in most cases limits the liability of carriers in respect of loss of or damage to cargo. Agreed stopping places are those places (other than the places of departure and destination) shown under requested routing and/or those places shown in carriers' timetables as scheduled stopping places for the route Address of first carrier is the airport of departure. SEE CONDITIONS ON REVERSE HEREOF.

3/ SHIPPER'S ACCOUNT NUMBER | SHIPPER'S NAME AND ADDRESS

SANSO CO., LTD.,

TOKYO, JAPAN.

The shipper certifies that the particulars on the face hereof are correct and agrees to the CONDITIONS ON REVERSE HEREOF

SIGNATURE OF SHIPPER

BY BROKER/AGENT

4/ ISSUING CARRIER'S AGENT ACCOUNT NO. | ISSUING CARRIER'S AGENT NAME AND CITY | PHONE

Carrier certifies goods described below were received for carriage subject to the CONDITIONS ON REVERSE HEREOF, the goods then being in apparent good order and condition except as noted hereon

EXECUTED ON MAR. 25, 1971 (Date) AT TOKYO (Place)

AGENTS IATA CODE: TOKYO

INSURANCE—If shipper requests insurance in accordance with conditions on reverse hereof, indicate amount of insurance in figures in box marked 'amount of insurance' below.

SIGNATURE OF ISSUING CARRIER OR ITS AGENT

Copies 1, 2 and 3 of this Air Waybill are originals and have the same validity

5/

CHARGES PREPAID	CHARGES COLLECT	CURRENCY	DECLARED VALUE FOR CARRIAGE	AMOUNT OF INSURANCE	COD AMOUNT	SPECIAL ACCOUNTING INFORMATION
		USD	N.V.D.			

6/

NO. OF PACKAGES RCP	ACTUAL GROSS WEIGHT	Kg lb.	RATE CLASS	COMMODITY ITEM NO.	CHARGEABLE WEIGHT	RATE	NATURE AND QUANTITY OF GOODS(INCL. DIMENSIONS OR VOLUME)
1	10.5 K		N		10.5	0.71	BRIDGESTONE BRAND AUTOMOTIVE TIRE. : 1 EA.

7/ SPECIAL HANDLING INFORMATION(INCLUDING MARKS, NUMBERS AND METHOD OF PACKING)

INVOICE/ CASE MARK: UNCDRR 70/1-24 / ADDRESS

	WEIGHT CHARGE	VALUATION CHARGE	TOTAL OF AIRLINE CHARGES BELOW	AWB FEE	CODE	TOTAL OF NON-AIRLINE CHARGES BELOW ORIGIN	DESTINATION	COLLECT CHARGES IN DESTINATION CURRENCY
PREPAID 8/	7.46							
Y	AIRLINE AND NON-AIRLINE CHARGES, OTHER THAN WEIGHT CHARGE, VALUATION CHARGE AND AWB FEE							WEIGHT CHARGE
P	TOTAL PREPAID 7.46	AIRLINE AND NON-AIRLINE CHARGES, CONTINUED					INSURANCE CHARGE	VALUATION CHARGE
COLLECT 9/	WEIGHT CHARGE	VALUATION CHARGE	TOTAL OF AIRLINE CHARGES BELOW	AGENT'S DISBURSEMENTS		TOTAL OF NON-AIRLINE CHARGES BELOW ORIGIN	DESTINATION	OTHER CHARGES INCL COD FEE
Y	AIRLINE AND NON-AIRLINE CHARGES, OTHER THAN WEIGHT CHARGE, VALUATION CHARGE AND AGENT'S DISBURSEMENTS							COD
L	COD AMOUNT	COD FEE	AIRLINE AND NON-AIRLINE CHARGES, CONTINUED				INSURANCE CHARGE	TOTAL COLLECT

FOR CARRIER'S USE ONLY AT DESTINATION

COPY 12

131- 5517 6251

FORM AC-12501 B

PRINTED IN JAPAN

No. ADM/036

Seoul, 4 March 1971

Dear Mr. Masunari,

Free Replacement of One Missing Tyre

Thank you for your letter No. 227 of 27 February 1971 on the above subject.

In the absence of Mr. Humphries who is on home leave at present, I am writing to express our appreciation of your prompt response in arranging to have the missing tyre replaced. Accordingly, enclosed herewith is the original insurance policy duly signed by me.

With renewed thanks,

Yours sincerely,

Willem Marbus
Actg. Chief Administrative Officer

Mr. T. Masunari
President
SANSO CO. Ltd.,
Tokyo, JAPAN

CABLE ADDRESS:
SANSOMASUNARY TOKYO

TEL: TOKYO 431—1469 · 3153
436—2088 · 2089

SANSO CO., LTD.

NO. 27, 2-CHOME, SHIBA-HAMAMATSU-CHO, MINATO-KU
105-TOKYO, JAPAN

Tokyo, 27 February 1971
Letter No.227

Ref. ADM/036

Mr. George A. Humphries
Chief, Administrative Officer
United Nations Commission for
the Unification and Rehabilitation
of Korea (UNCURK)
Yongdong-po
P.O. Box 56
SEOUL, Korea

Dear Mr. Humphries,

Free-relacement of one missing tyre in transit
for Requisition 70/L-24 & Invoice No.2437

I acknowledge receipt of your letter Ref. ADM/036 dated 18 February 1971.

I am very sorry to learn that:

One Bridgestone Tyre - 825-14 6PR SD D/W CIF Inchon $16.00

which was sent by New Chance on 6 February 1971 covering our Invoice No. 2437 dated 28 January 1971 has been missing in transit.

To rectify this damage, I have arranged to despatch one tyre by airfreight around 15 March 1971 from Tokyo to Seoul, at free of charge, filing Yasuda Fire and Marine Insurance Co., Tokyo.

Would you please send me "Original Insurance Policy No. HO 50577" with your signature. If, you have no original, would you please sign on "Duplicate Insurance Policy", enclosed herewith for filing purpose.

Regarding our Invoice No.2437 dated 28 January 1971 for the amount of US$839.70, C.I.F. Inchon, I had sent to you only for the purpose of shipping advice. Please rest assured that I had received payment in full from you together with Invoice No.2447 dated 9 December 1970 for the amount of $117.10, making total amount of US$956.80 by your cheque No.5891 dated 16 December 1970 without fail.

I feel sure that this settlement would be satisfactory to you.

Yours faithfully,

SANSO CO.,LTD.,

T.Masunari, President

cc - Yasuda Fire & Marine Insurance Co.
TOKYO, Japan

No. AIM/036

U.N.C.U.R.K.
Yongdong-po
P.O. Box 56
SEOUL, Korea

18 February 1971

Dear Mr. Masunari,

I enclose herewith a copy of a letter addressed to the Cho Yang Shipping Company in Seoul, the local agents for ss "NEW CHANCE" instituting a claim for the loss of one (1) Tyre shortlanded on your Invoice No.2437 dated 28 January 1971. Since the consignment of forty (40) packages was shipped under insurance coverage, please file a claim with the insurers for the value of the tyre, viz. $16.00.

In the same connection, we have received an Invoice from Sanso Co. in the amount of US$839.70. We believe this invoice has been sent to us inadvertently as our records show that this invoice was settled in full by UNCURK Cheque No. 5891 dated 16 December 1970 in the amount of $956.80 being settlement of your Invoice 2437 dated 1 December 1970 and Invoice No. 2447 dated 9 December 1970 in respect of Tyres and Tubes and Sprinkler respectively. Acknowledgment of this payment is contained in your receipt No. 1223 dated 23 December 1970.

We will appreciate your looking into this duplication of the same invoice bearing two different dates (1 December 1970 and 28 January 1971) and advising us that, in fact, payment has been effected in full.

Thanking you,

Yours sincerely,

(George A. Humphries)
Chief Administrative Officer

Mr. T. Masunari
President
SANSO CO., LTD.,
No.27, 2-Chome, Shiba
Hamamatsu-Cho, Minato-ku
105, Tokyo, JAPAN.

No. ADM/047

U.N.C.U.R.K.
Yeagdongpo
P.O. Box 56
SEOUL, Korea

18 February 1971

Dear Sirs,

This is to advise you that a consignment of forty (40) packages containing 'Bridgestone' Tyres and Tubes shipped under Bill of Lading No. MI-3 dated February 7, 1971, from Moji, Japan, to Inchon, Korea, on board ss "NEW CHANCE" Voyage 68, arrived in Inchon on 11 February 1971.

On taking delivery of the consignment, it was discovered that the following item was missing :-

One (1) 'Bridgestone' Tyre, 825-14, 6 ply. Value $16.00

We are, therefore, instituting a claim in respect of the value of the item and in this connection attach hereto the following documents :-

(i) Copy of Invoice No.2437 dated 28 January 1971 from SANSO Co., Ltd;

(ii) Copy of Shortlanded Report issued by Young Jin Enterprise Co., Ltd., Inchon, Korea

(iii) Copy of Bill of Lading No. MI-3 dated February 7, 1971

We shall be grateful for your immediate action in this matter and will appreciate early settlement of our claim in the amount of $16.00.

Thanking you,

Yours sincerely,

(George A. Humphries)
Chief Administrative Officer

CHO YANG SHIPPING COMPANY,
Seoul, Korea

cc: SANSO CO. LTD.
Tokyo, Japan